30" PROFESSIONAL GAS COOKTOP - 4 BURNERS

CG304P/S

FEATURES

Maintain control with dual-stacked burners that go from 18,000 Btu down to a mere breath of flame

Simmer and melt sauces, soups, and marinades easily with the lower tier of the dual-stacked burner

Matches the professional look of other Sub-Zero, Wolf, and Cove products

Reignites flame automatically with spark ignition system

Cleanup is a snap as sealed, seamless burner pans contain sloshes and spills

Move pots and pans effortlessly across the continuous cast-iron grates

ACCESSORIES

2-Burner Wok Grate

30" Transitional Grate Set

Transitional Grates

Signature red, black or brushed stainless control knobs

High altitude conversion kits available

Accessories available through an authorized dealer.
For local dealer information, visit subzero-wolf.com/locator.

KNOB OPTIONS

COOKTOP SPECIFICATIONS

- 2 - 9,200 Btu Burner
- 1 - 12,000 Btu Burner
- 1 - 18,000 Btu Burner

Specifications are subject to change without notice. This information was generated on August 25, 2021. Verify specifications prior to finalizing your cabinetry/enclosures.

30" PROFESSIONAL GAS COOKTOP - 4 BURNERS

PRODUCT SPECIFICATIONS

Model	CG304P/S
Dimensions	30"W x 4"H x 21"D
Weight	57 lbs
Electrical Supply	120 VAC, 60 Hz
Electrical Service	15 amp dedicated circuit
Gas Supply	3/4" ID line
Gas Inlet	1/2" NPT female

ELECTRICAL

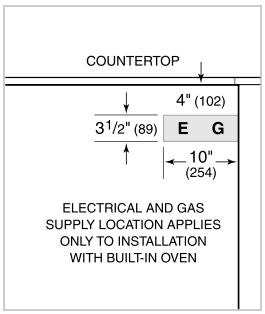

GAS

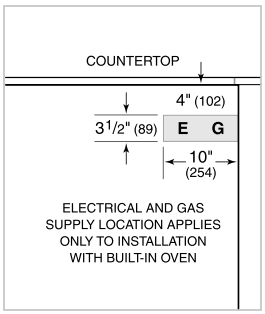

NOTE: Dimensions in parenthesis are in millimeters unless otherwise specified

DIMENSIONS

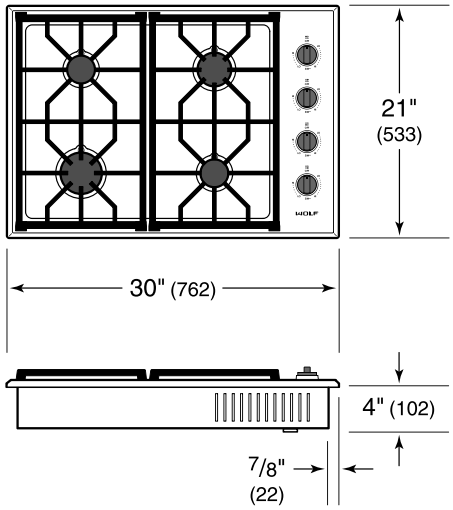

STANDARD INSTALLATION

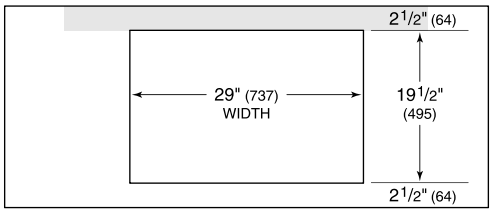

COUNTERTOP CUT-OUT

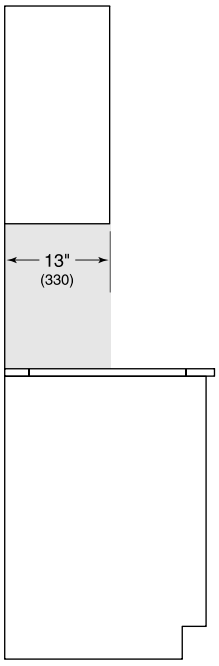

SIDE VIEW

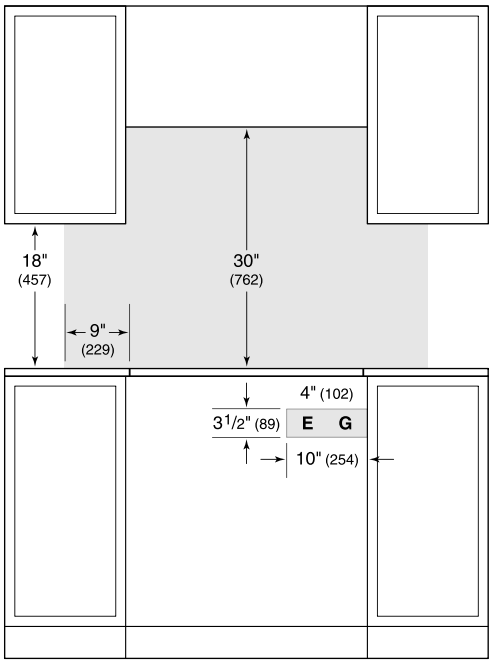

FRONT VIEW

NOTE: Shaded area above countertop indicates minimum clearance to combustible surfaces, combustible materials cannot be located within this area.
Electrical and gas supply location only applies to installations with built-in oven.

Specifications are subject to change without notice. This information was generated on August 25, 2021. Verify specifications prior to finalizing your cabinetry/enclosures.