KitchenAid®

BOTTOM MOUNT REFRIGERATOR
Left Hand Door Swing

MODELS:

KRBL102ESS01 (Stainless Steel)

05/30/2019

Part No. W11368749 Rev. A

CABINET PARTS

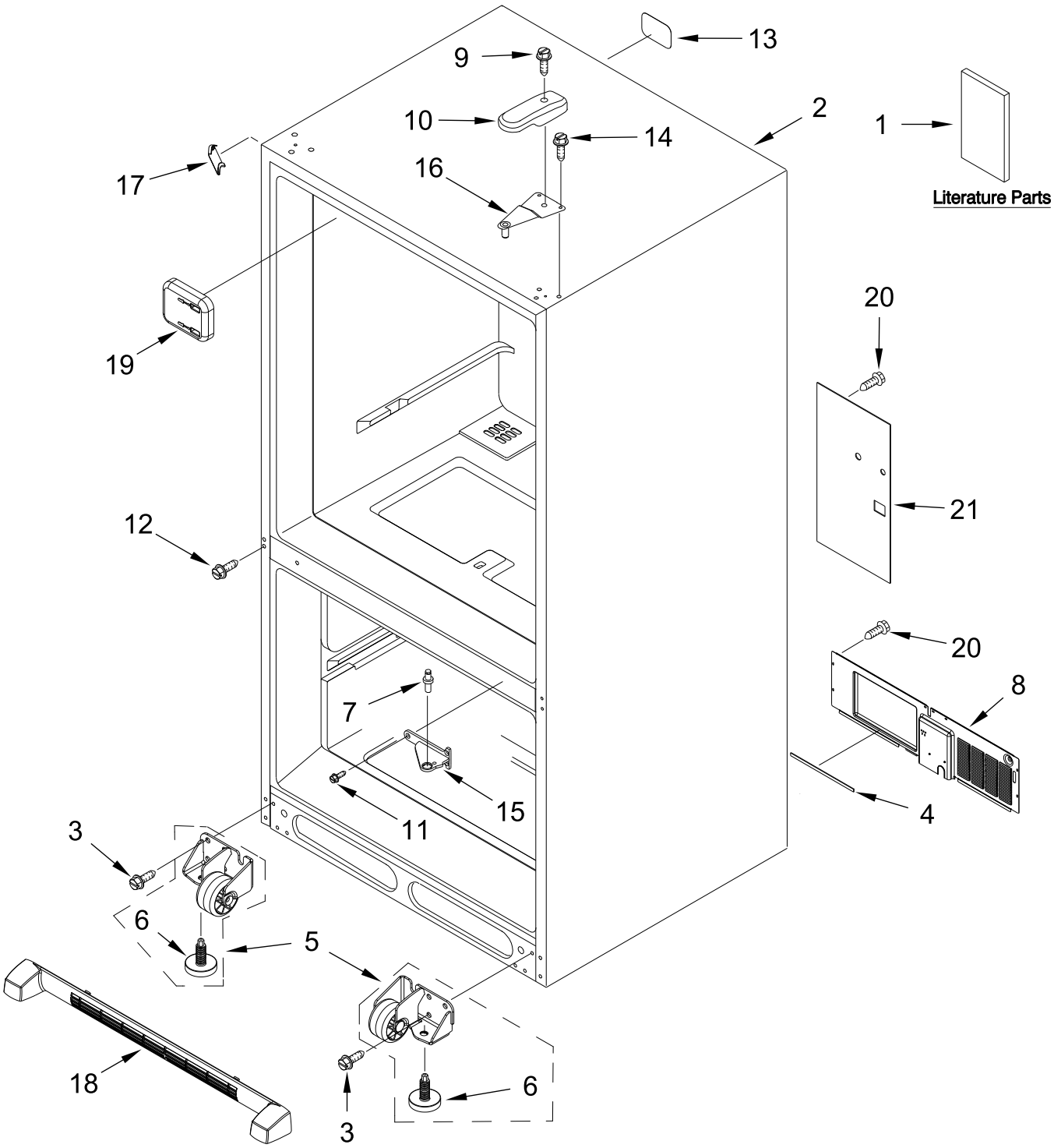

CABINET PARTS

Illus. No.	Part No.	Description
1		Literature Parts
	W11296633	Owners Manual
	W11306943	Energy Guide
	W11297588	Tech Sheet
2		Cabinet (Not a Serviceable Part)
3	W10709365	Screw
4	W10307331	Gasket, Foam
5		Assembly, Roller
	W10515763	Left Hand
	W10515762	Right Hand
6	W10141622	Brake, Roller
7	10351006	Pin, Center Hinge
8	W10210979	Cover, Unit
9	12992602	Screw
10		Cover, Top Hinge
	12477601AP	Grey
11	W10673840	Screw (Stainless)
12	12990521	Screw
13	12249902	Label, Fill Tube
14	12992403	Screw
15		Hinge, Center
	12607103AP	Grey
16	12566606ED	Hinge, Top
17		Cover, Corner
	12587703AP	Grey
18		Assembly, Grille (Includes Clips)
	W10534160	Grey
19	W11182229	Cover, Fill Tube
20	12990511	Screw
21	W10217701	Cover, Water Valve

REFRIGERATOR LINER PARTS

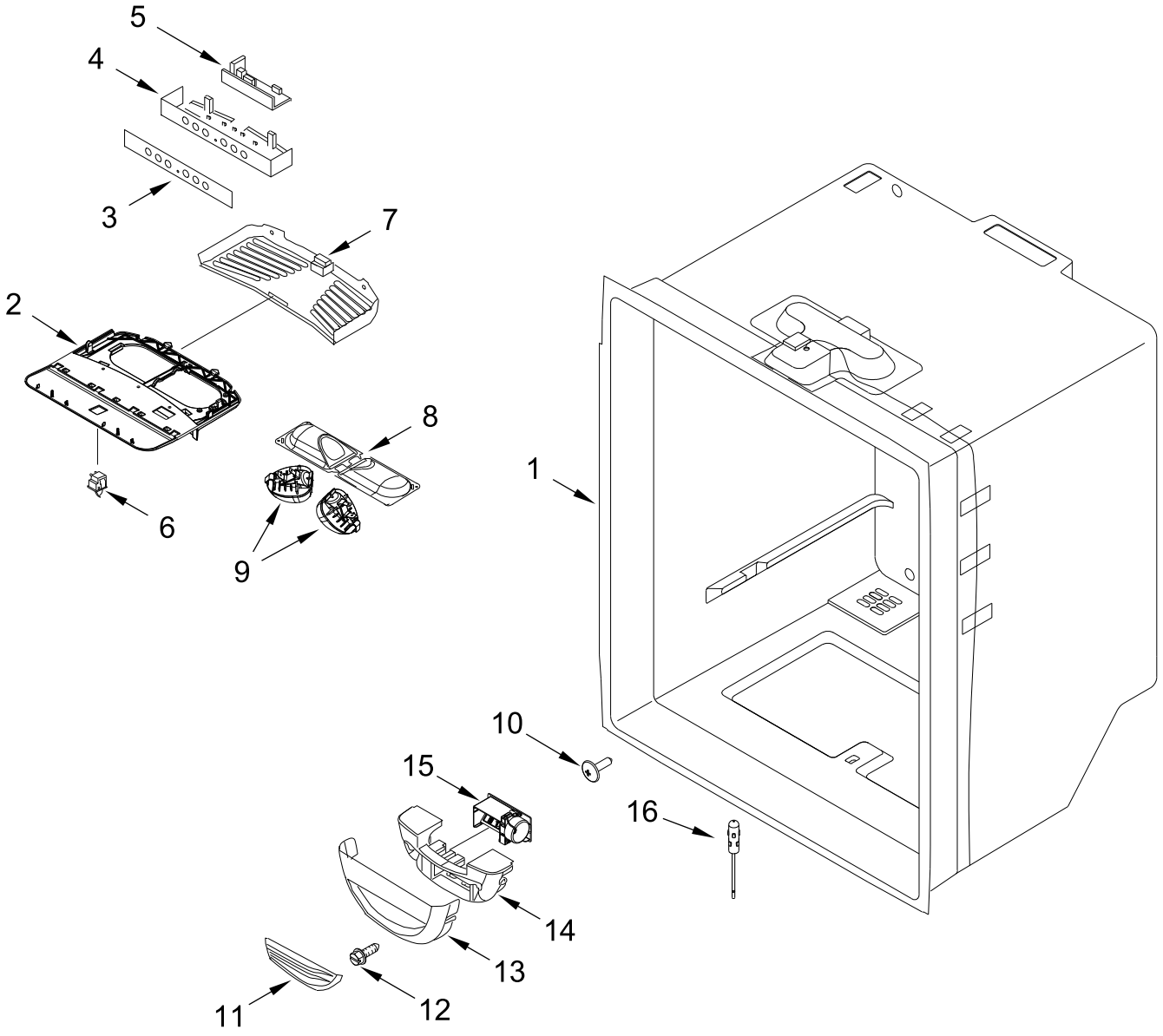

REFRIGERATOR LINER PARTS

Illus. No.	Part No.	Description
1		Liner (Not A Serviceable Part)
2	W10464757	Module, Light
3	W10593588	Overlay
4	W10464769	Module, Control
5	W10503278	Control, Electronic
6	W10847853	Switch, Light
7	W11132917	Cover, Light
8	W10443023	Housing, Light
9	W11251749	Light Module, LED
10		Plug, Button
	M0310343	White
11	12806801	Insert, Damper Cover
12	12990604	Screw
13	12806701	Cover, Damper
14	13012402	Insulation, Damper
15	W10594330	Damper, Control
16	12791403	Thermistor
		FOLLOWING PARTS NOT ILLUSTRATED
	W10422363	Harness, Refrigerator Control (Includes Thermistor)

FREEZER LINER PARTS

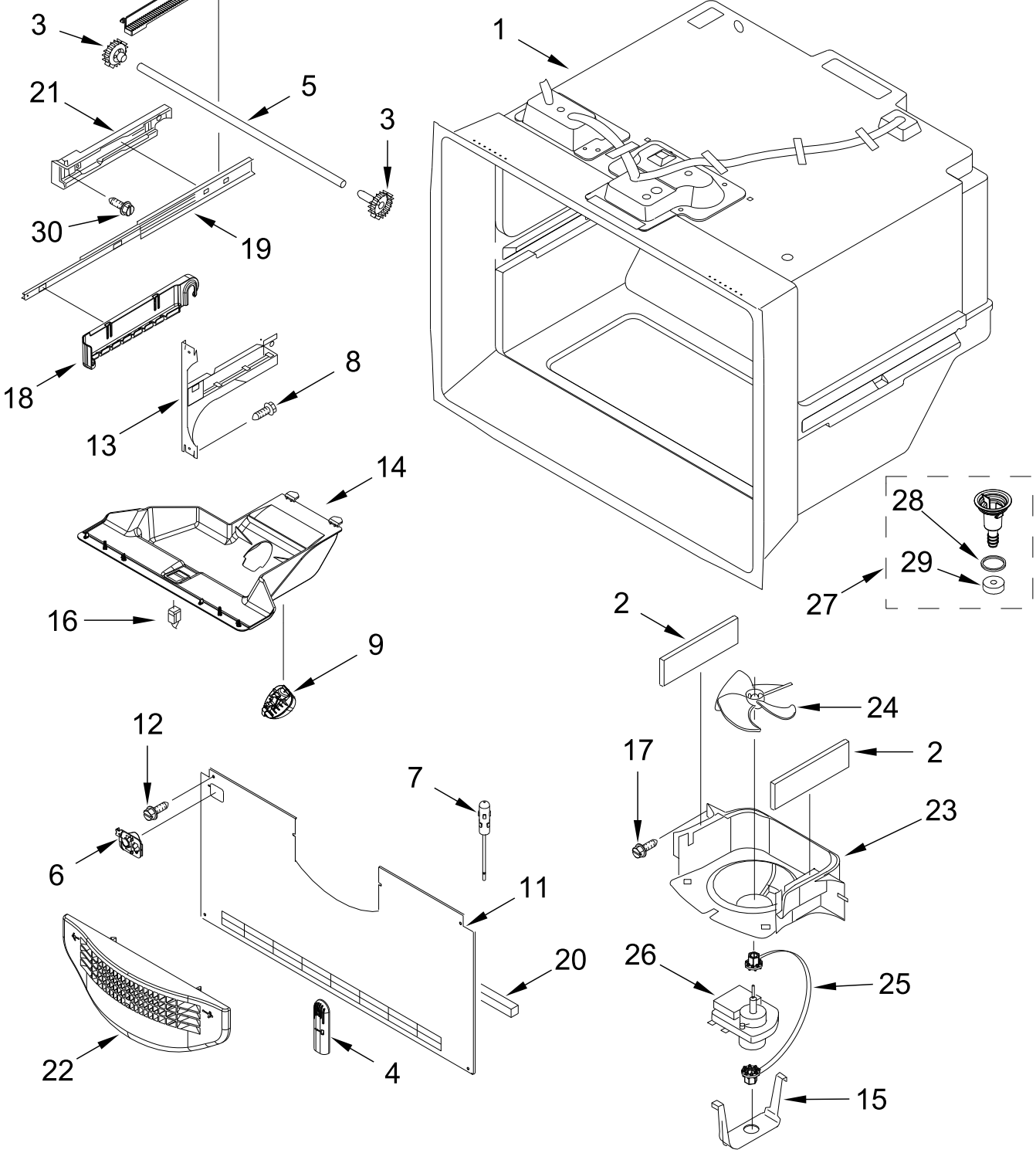

FREEZER LINER PARTS

Illus. No.	Part No.	Description
1		Liner (Not A Seviceable Part)
2	A3189392	Gasket, Foam
3	12002497	Gear
4	12815301	Cover, Thermistor
5	W10802331	Shaft, Rack
6	W11261524	Guide, Fill Tube
7	12791409SP	Thermistor
8	12990521	Screw
9	W11251749	Light Module, LED
10		Rack, Side
	W10516603	Left Hand
	W10516602	Right Hand
11	W10308415	Cover, Evaporator
12	12990511	Screw
13		Bracket, Door
	W10330991	Left Hand
	W10330993	Right Hand
14	W10277025	Module, Light
15	13058002	Clip, Evaporator Motor
16	W10847849	Switch, Light
17	12990504	Screw
18		Cradle, Basket
	W10280608	Left Hand
	W10280613	Right Hand
19	W10120018	Slide, Door
20	A3189395	Gasket, Foam
21		Adapter, Slide
	W10284684	Left Hand
	W10284685	Right Hand
22	13024803	Grille, Freezer Air
23	13057901	Shroud, Evaporator Fan
24	2169142	Blade, Fan
25	W10121318	Grommet
26	W10128551	Motor, Evaporator
27	W10662407	Assembly, Drain Funnel
28	M0500703	Seal
29	B8381501	Gasket, Drain
30	12990501	Screw

REFRIGERATOR DOOR PARTS

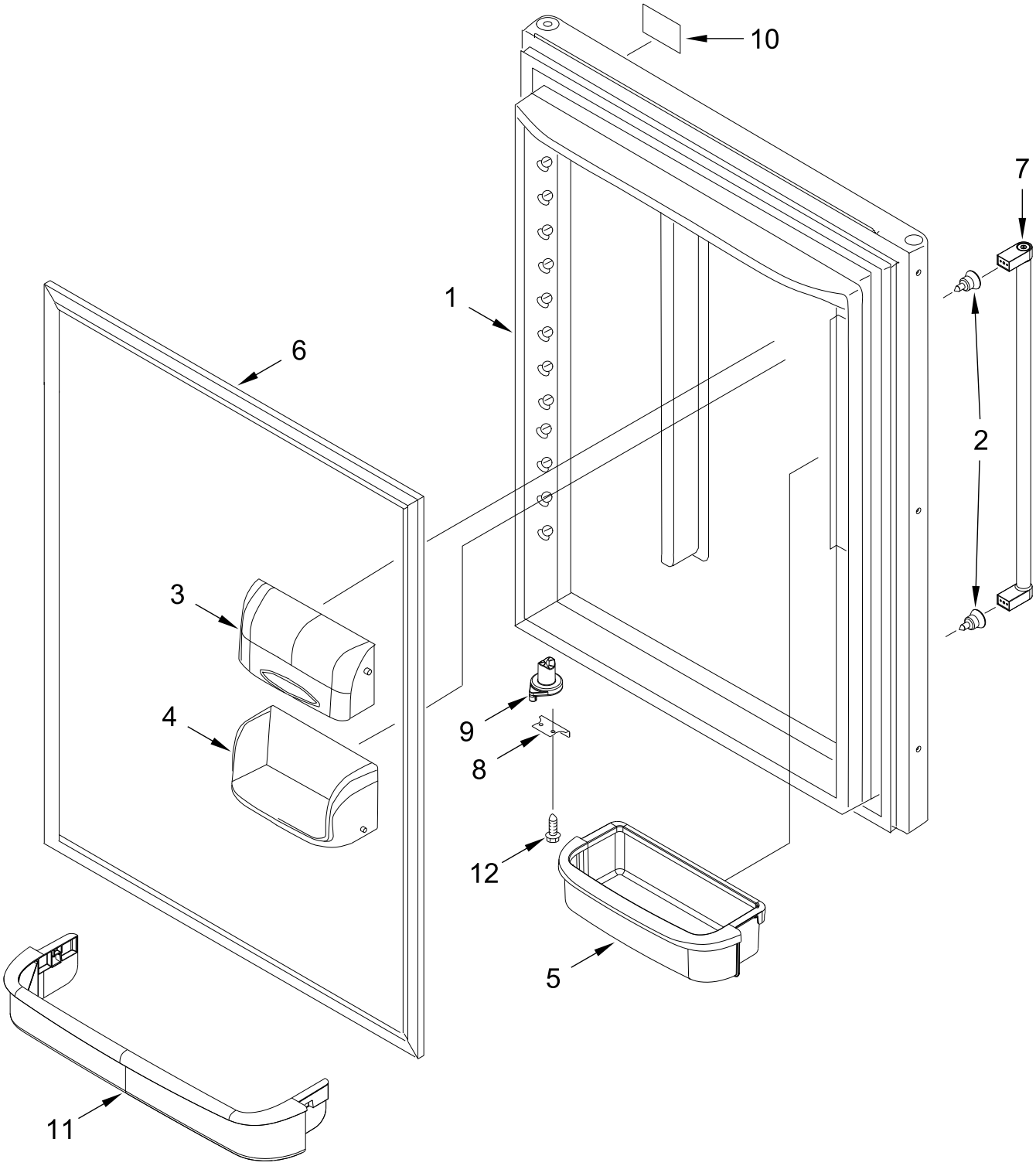

REFRIGERATOR DOOR PARTS

Illus. No.	Part No.	Description
1		Door, Refrigerator
	13107544S	Stainless
2	W10460893	Screw
3	12804701SP	Door, Dairy
4	12369502SP	Tray, Dairy
5	W10371194	Bucket, Medium
6		Gasket, Door
	W10443314	Grey
7		Handle, Door
	W10774991	Stainless
8		Stop, Door
	10447114	Grey
9		Closure, Door
	12028505AP	Grey
10	W10518672	Badge
11	12557905	Retainer, Door
12	12990519	Screw

FREEZER DOOR PARTS

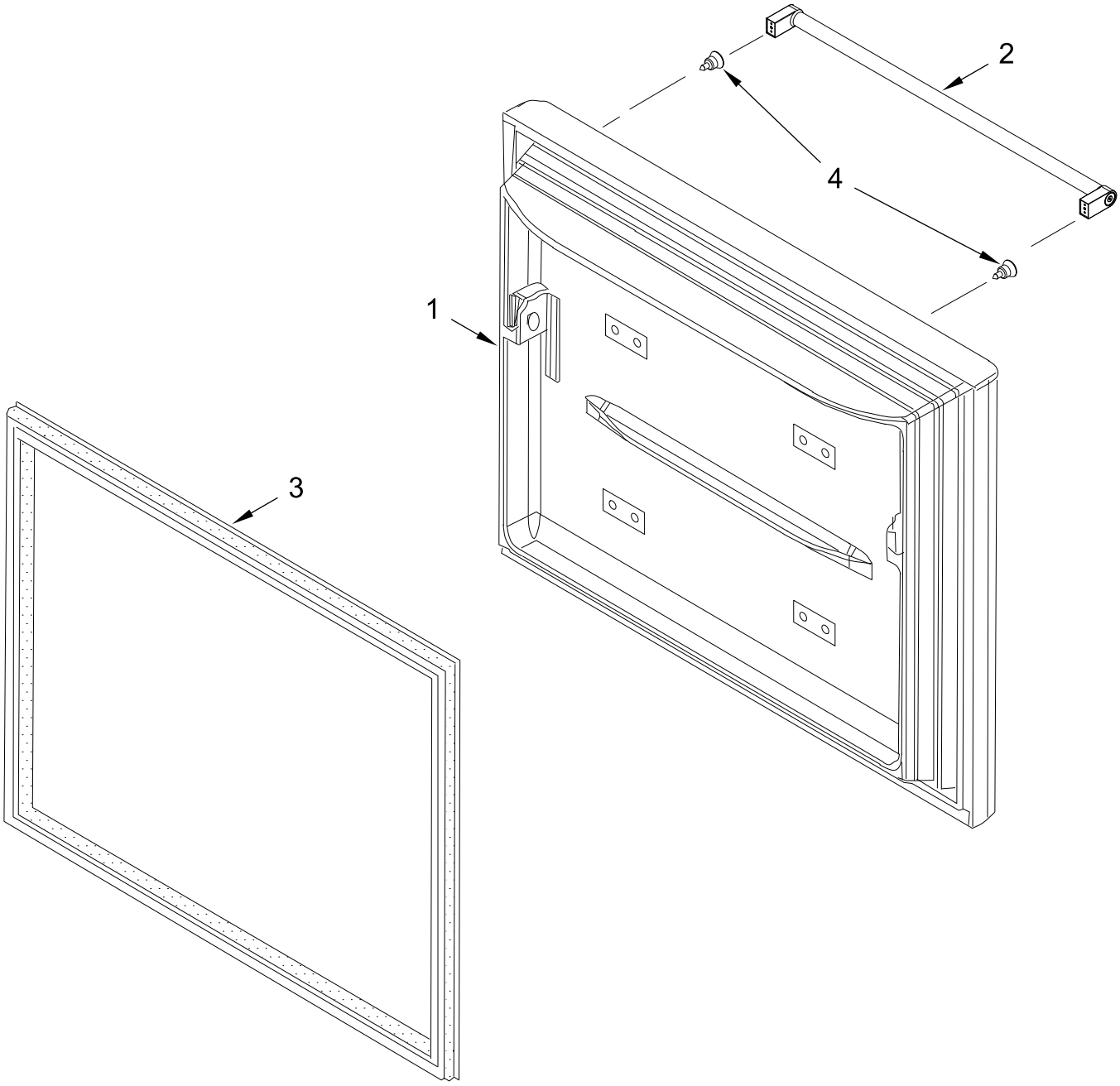

FREEZER DOOR PARTS

Illus. No.	Part No.	Description
1	13109217S	Door, Freezer Stainless
2	W10774991	Handle, Door Stainless
3	W10443316	Gasket, Door Grey
4	W10460893	Screw

UNIT PARTS

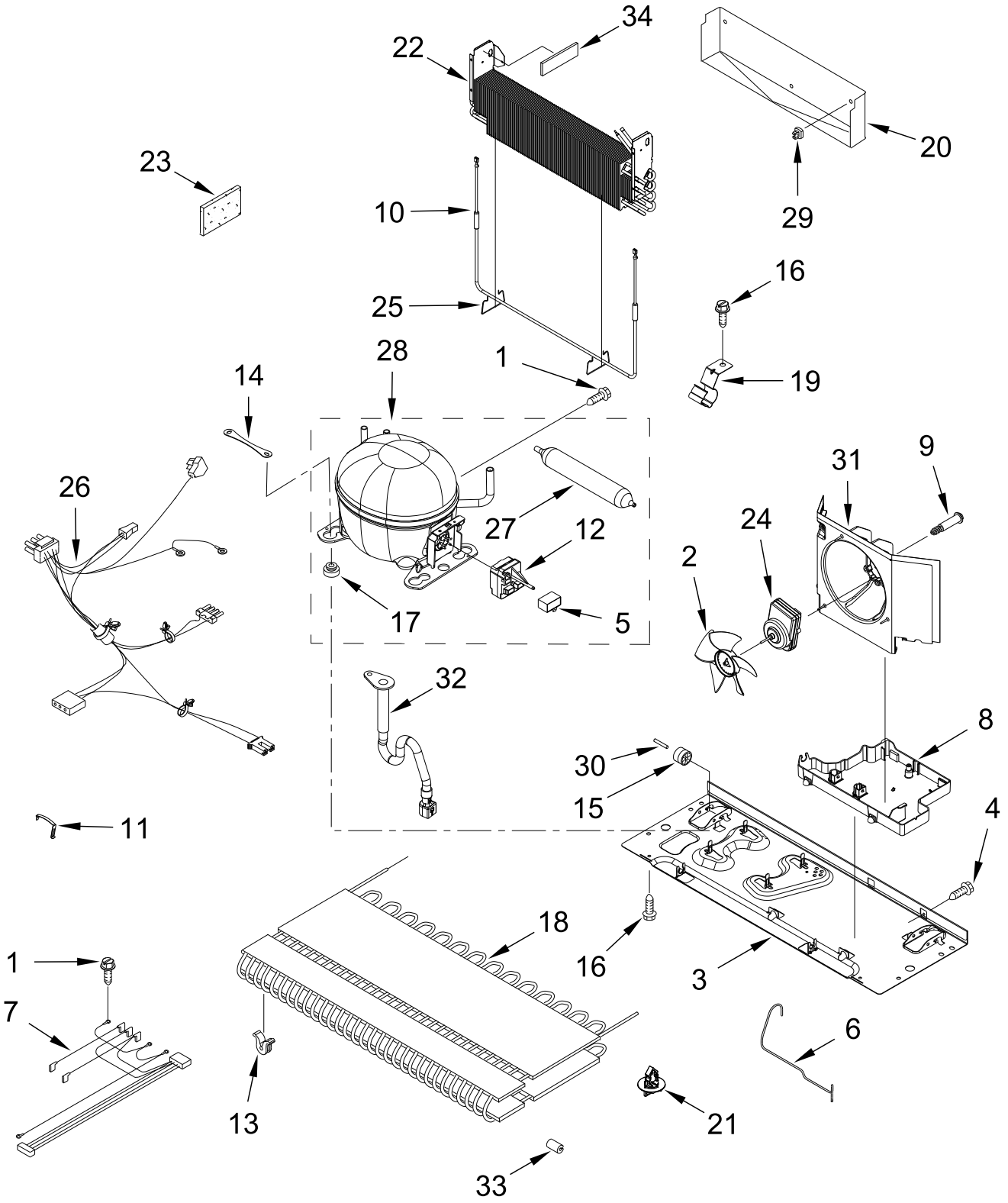
34
22
20
23
29
10
16
25
28
1
19
14
31
9
26
27
12
24
2
17
5
32
8
30
15
11
4
18
16
1
3
7
6
13
21
33

UNIT PARTS

Illus. No.	Part No.	Description
1	12992301	Screw
2	12825803	Blade, Fan
3	W10480110	Basepan
4	12990511	Screw
5	W10350564	Capacitor
6	W10233570	Tube, Discharge
7	W11050969	Harness, Evaporator (Includes Heater)
8	W10655367	Pan, Drain
9	W10622701	Screw
10	12729128	Heater, Defrost
11	W10216075	Strap, Bale
12	W10796752	Device, Start
13	W10137529	Grommet, Condenser
14	W10236396	Strap, Compressor
15	12477102	Roller
16	12992101	Screw
17	10835903	Grommet
18	W10346420	Condenser
19	W10281329	Clip, Drier
20	W10292802	Tray, Drip
21	W10815863	Clip, Condenser
22	W10669254	Evaporator
23	2169104	Insulation, Sound Deadening
24	W10909377	Motor, Condenser Fan
25	10428101	Clip, Heater
26	W11218258	Harness, Unit (Includes Power Cord)
27	W10177049	Drier
28	W10879296	Compressor
29	10623002	Clip, Evaporator
30	12477202	Axle, Roller
31	W10189184	Shroud, Condenser Fan
32	W10622099	Extension, Drain Tube
33	2319835	Grommet, Condenser
34	A3189397	Gasket, Foam
		FOLLOWING PARTS NOT ILLUSTRATED
	978025	Valve, Access (1/4")
	978026	Valve, Access (5/16")
	978027	Valve, Access (3/8")
	978029	Valve, Access (5/8")
	978030	Valve, Access (3/4")
	876764	Valve, Access (3/16")
		REFRIGERANT CHARGE
		5.00 oz. (R-134A)

SHELF PARTS

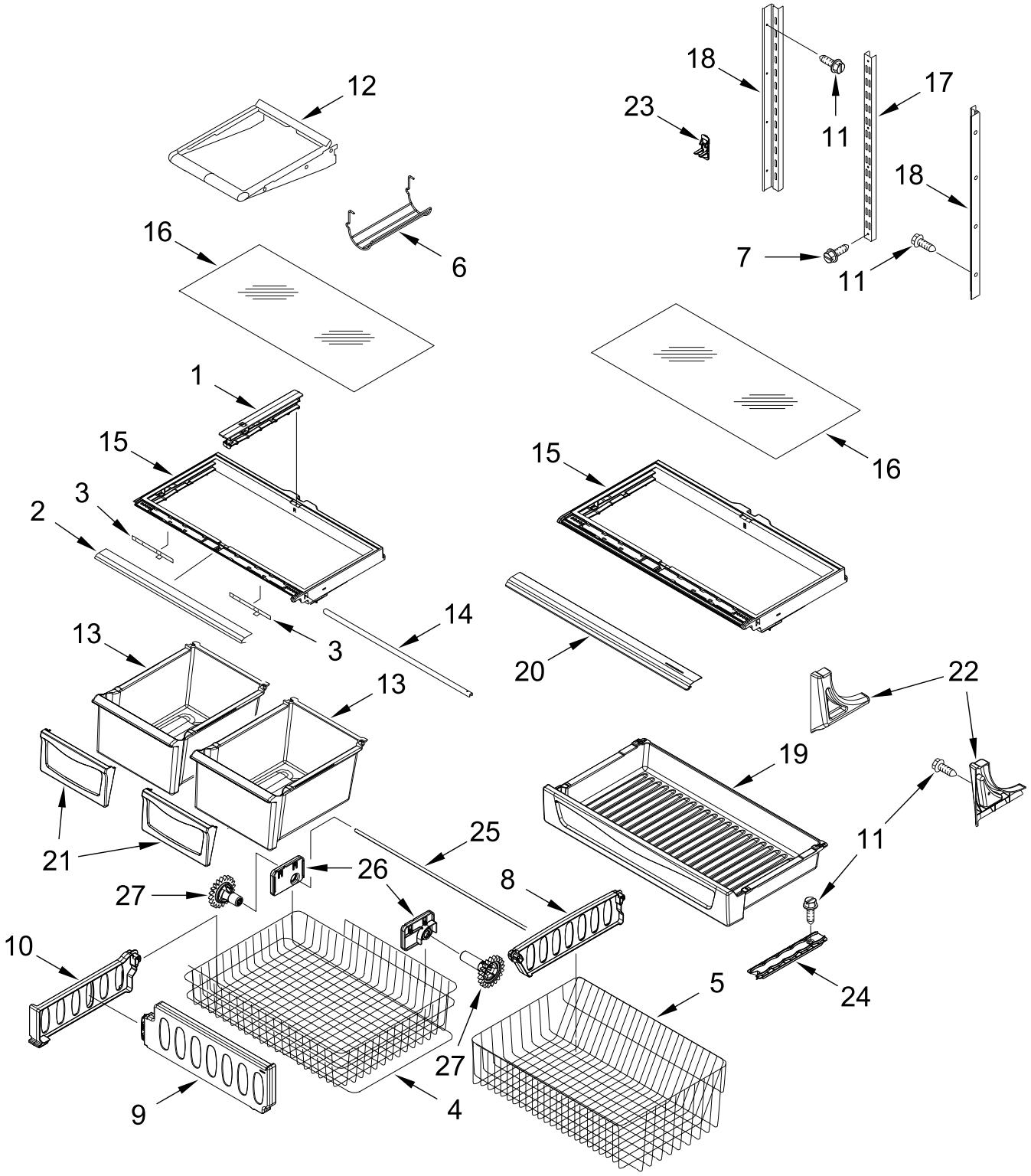
12
18
17
23
11
18
16
6
7
11
1
15
16
15
3
2
14
3
13
20
22
13
19
21
25
11
26
27
8
10
5
24
27
9
4

SHELF PARTS

Illus. No.	Part No.	Description
1	W10671238	Rail, Center Crisper
2	W10231343	Trim, Crisper
3	12530805SP	Slide, Humidity Control
4	W11115252	Basket, Freezer (Upper)
5	W11115780	Basket, Freezer (Lower)
6	W10335942	Rack, Hanging Wire
7	W10215666	Screw
8	W10146440	Divider, Basket (Lower)
9	W10311695	Divider, Basket (Upper)
10	W10241046	Divider, Basket (Upper)
11	12990513	Screw
12	12463509	Shelf, Stationary
13	12530505SP	Pan, Crisper
14	12227303WD	Brace, Crisper Cover
15	W10671241	Frame, Crisper
16	12204822	Glass, Crisper
17	W10273463	Ladder, Center
18	W10251969	Ladder, Side
19	W10328327	Drawer, Pantry
20	W10656986	Trim, Pantry Front
21	12643702SP	Frame, Crisper Pan
22		Support, Pantry
	12531001	Left Hand
	12531002	Right Hand
23	12531802	Hook, Ladder
24	12531901	Track, Deli Drawer
25	W10802339	Shaft, Rack
26		Mount, Gear
	W10348259	Left Hand
	W10348260	Right Hand
27		Gear
	W10474716	Left Hand
	W10474715	Right Hand

OPTIONAL PARTS

ICE MAKER FIELD INSTALLABLE

Illus. No.	Part No.	Description
	W10261234	IC13B

PAINT, TOUCH-UP (1/2OZ.)

Illus. No.	Part No.	Description
	72017	White
	72032	Black
	4392901	Biscuit/Bisque

PAINT, PRESSURIZED SPRAY (12 OZ.)

Illus. No.	Part No.	Description
	350942	White Primer
	350930	White
	350939	Enamel, Black
	4392901	Biscuit/Bisque

PAINT, BULK (1 QT.)

Illus. No.	Part No.	Description
	799344	White (Uncut)
	799344	White (Uncut)
	4392900	Biscuit/Bisque

MISCELLANEOUS

Illus. No.	Part No.	Description
	212643	Sealer, Gum (4 Feet)
	479502	Tape, Vinyl (3/4 x 108")
	505587	Sealer, Mastic (1 Qt)
	503695	Cork, Sealer
	542638	Grease, Silicone (1/2 Oz.)
	542639	Cement, Alumilastic (1 1/4 Oz.)
	799833	Kit, Evaporator Repair (Aluminum Epoxy)
	833938	Kit, Terminal Connector
	8003RP	Kit, Water Inlet

TORX SCREW WRENCH

Illus. No.	Part No.	Description
	1117510	Torx Key

ACCESSORIES

Illus. No.	Part No.	Description
	2217192	Cleaner, Stainless Steel