PRD48WDSGU

48-INCH DUAL-FUEL PRO GRAND® RANGE WITH STEAM AND GRIDDLE

PROFESSIONAL SERIES, COMMERCIAL-DEPTH, PORCELAIN COOKTOP SURFACE

FEATURES & BENEFITS

- ★ - 4 ExtraLow® burners for simmering, melting, or holding long durations
- ★ - ExtraHigh Star® Burner—22,000 BTUs of power for searing or boiling
- ★ - Hydraulic SoftClose® hinges prevent slamming for ultra smooth closing
- Non-stick griddle with even heating across the entire surface
- Superfast 2.5-hour self-clean mode-fastest in the industry

TECHNICAL DETAILS

Circuit Breaker	50 A
Volts	240 / 208 V, 60Hz 4 Wire
Energy Source	Gas and Electric
Plug Type	No Plug
Power Cord Length	Purchase Separately
Gas Supply	3/4"

WARRANTY

Limited Warranty, Entire Appliance, Parts and Labor	2 Year

SEE PAGE 2 FOR INCLUDED AND OPTIONAL ACCESSORIES

★ THERMADOR® EXCLUSIVE

RANGETOP

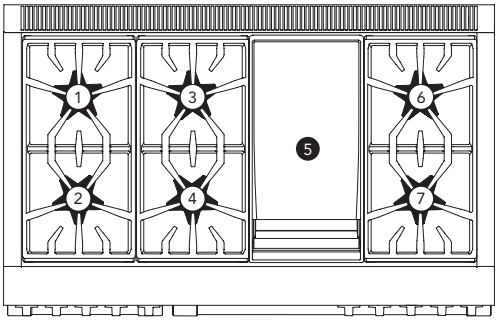

Total Number of Cooktop Burners	6 + Griddle
1 – Power of Back Left Burner BTU	15,000 and XLO
2 – Power of Front Left Burner BTU	22,000 and XHI / XLO
3 – Power of Back Center Burner BTU	15,000
4 – Power of Front Center Burner BTU	18,000
5 – Power of Center 12" Electric Griddle	1,630 W (6-Pass)
6 – Power of Back Right Burner BTU	15,000 and XLO
7 – Power of Front Right Burner BTU	18,000 and XLO

OVEN

Oven Capacity (Lg / Sm)	4.9 / 1.6 cu. ft.
Cooking Modes – Large Cavity Bake, Convection Bake, True Convection, Convection Roast, Roast, Convection Broil, Broil	
Cooking Modes – Small Cavity Proof, Keep Warm, Steam Programs, True Convection,Slow Cook, Defrost, Reheat, Steam Convection, Steam	
Sabbath (Lg / Sm)	Yes / Yes
Self-Clean (Lg / Sm)	Yes / Yes
Telescopic Rack(s) (Lg / Sm)	3 / 0
Interior Lights (Lg / Sm)	2 / 1
Bake Power (Lg / Sm)	2,000 W / NA
Broil Power (Lg / Sm)	4,000 W / NA
Convection Power (Lg / Sm)	2,750 W / NA
Steam Bowl Element	1,800 W
Steam Convection	2,750 W
Warming Drawer	400 W
Home Connect™ (Wi-Fi Enabled)	Yes, Large Oven Only
Lg Cavity Interior Dimensions (HxWxD)	16 3/8" x 24 1/4" x 21 1/2"
Lg Cavity Usable Dimensions (HxWxD)	12" x 22 1/2" x 19 1/2"
Sm Cavity Interior Dimensions (HxWxD)	10 1/4" x 14 1/4" x 17 3/8"
Sm Cavity Usable Dimensions (HxWxD)	9 5/8" x 12" x 16"

DIMENSIONS & WEIGHT

Overall Appliance Dimensions (HxWxD)	35 3/4" – 36 3/4" x 47 15/16" x 27 7/8"
Required Cutout Size (HxWxD)	35 3/4" – 36 3/4" x 48" x 24" – 25 1/8"
Net Weight	507 lbs.

PRD48WDSGU
48-INCH DUAL-FUEL PRO GRAND® RANGE WITH STEAM AND GRIDDLE
PROFESSIONAL SERIES, COMMERCIAL-DEPTH, PORCELAIN COOKTOP SURFACE

ACCESSORIES (INCLUDED)

3 Telescopic Racks, 1 Sm. Std. Rack, Multi-Point Meat Probe, 1 Griddle Plate, 1 Grease Tray, 1 Steam Pan, 1 Lg Broil Pan, 1 Sm. Broil Pan, Island Trim

ACCESSORIES (OPTIONAL)

PWOKRINGHC
Wok Ring

PAGRIDDLE
Professional Griddle, Sits on Top of Grates Over 2 Star Burners, High-Release Coating

PAGRIDLFW
12" Pro Griddle with Tray, (Fusion Coating Option for Griddle Models)

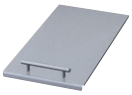

PA12LCVRW
12" Professional Griddle Cover

PA48WTKG
Toekick

PALPKITDGW
LP Conversion Kit, Pro Grand Dual Fuel Models with 4 and 6 Burners

CS2XLH
Cooking Pan, Full Size, 1 5/8" Deep

CS2LH
Baking Tray, Full Size, 1 1/4" Deep

CS1XLPH
Perforated Cooking Pan, Half Size, 1 5/8" Deep

PA12CHPBLK
Chopping Block / Cutting Board

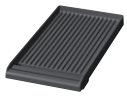

PA12GRILLW
12" Pro Grill Plate with Tray, (for Griddle Models), Non-Fusion Coating

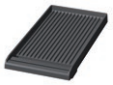

PA12GRILFW
12" Grill Plate with Tray (for Griddle Models), Fusion Coating

PA48WLBG
7" Low Backguard*

PARKB48SGY
Metallic Blue Knob Kit

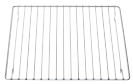

CSRACKH
Wire Rack

CS2XLPH
Perforated Cooking Pan, Full Size, 1 5/8" Deep

CS1XLH
Cooking Pan, Half Size, 2 1/2" Deep

PAALTKITGW
High Altitude Kit, Natural Gas Pro Grand Ranges, 5,400 ft. to 10,200 ft.

Contact Customer Support
High Altitude Kit, Gas or Dual-Fuel Pro Grand Ranges Connected to LP Gas, 10,000 ft. to 10,200 ft.

*Models PCG305xx, PRD305xx, PRD606xx, PRG305xx, PRG304xx and PRD304xx are suitable for 0" rear clearance to combustible surfaces. All other models: when using the included Island Trim a minimum 6" (152 mm) rear clearance is required to a combustible surface. When installing against a combustible surface, a Thermador® Low Backguard is required for a 0" rear clearance to the combustible surface. A Thermador Low Backguard must be purchased separately. A rear clearance to a surface covered in a noncombustible material (metal, ceramic tile, brick, marble, or stone) is 0" when using the included Island Trim. Clearances of less than 6" (152 mm) should be approved by the local codes and/or by the local authority having jurisdiction. Clearances from non-combustible materials are not part of the ANSI Z21.1 scope and are not certified by CSA.

PRD48WDSGU

48-INCH DUAL-FUEL PRO GRAND® RANGE WITH STEAM AND GRIDDLE

PROFESSIONAL SERIES, COMMERCIAL-DEPTH, PORCELAIN COOKTOP SURFACE

48-INCH RANGE DIMENSIONS

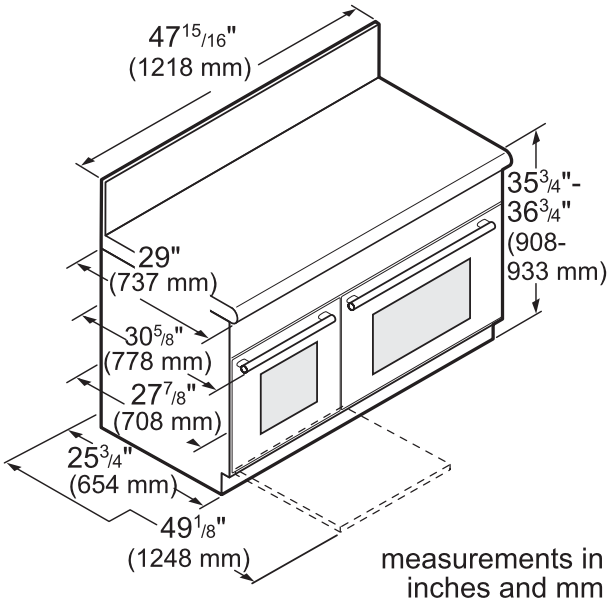

48-INCH RANGE CUTOUT DIMENSIONS

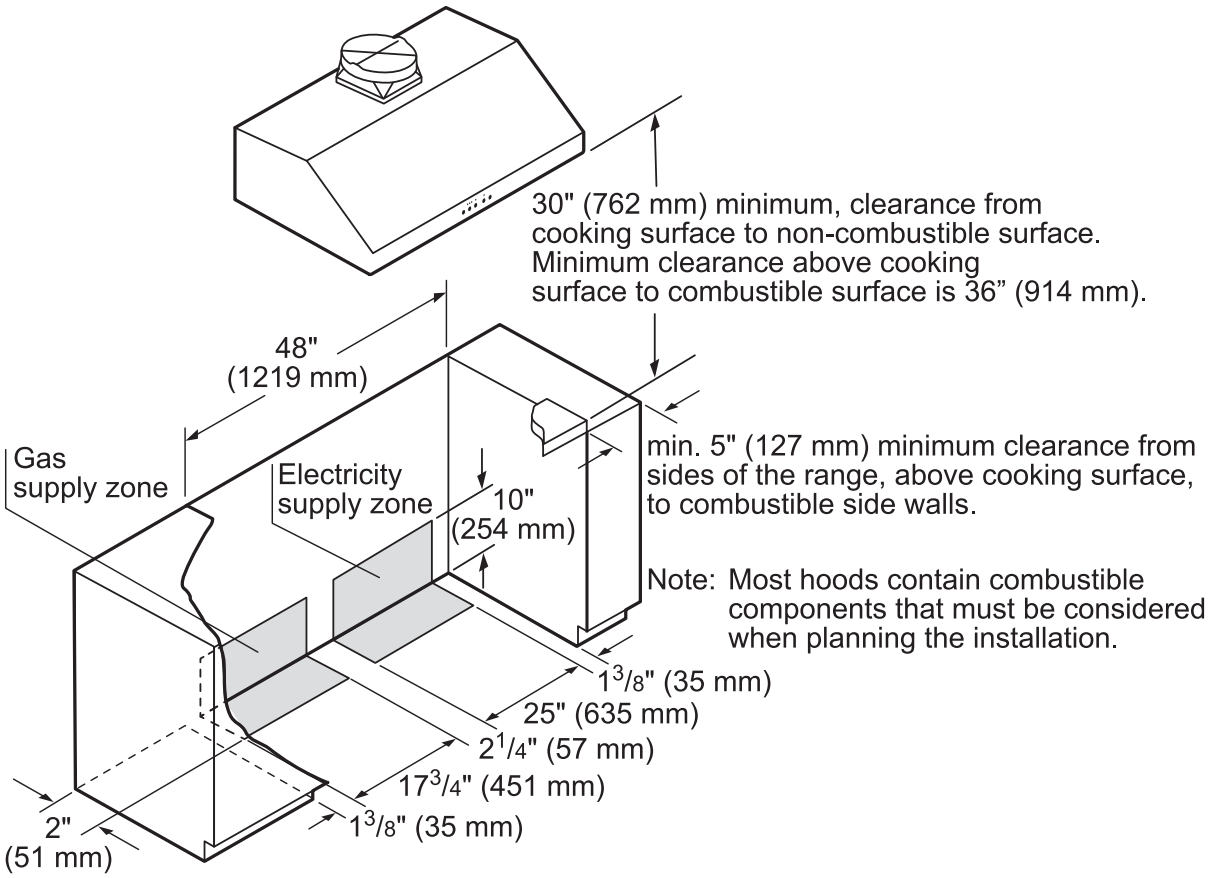

measurements in inches (mm)

PRD48WDSGU

48-INCH DUAL-FUEL PRO GRAND® RANGE WITH STEAM AND GRIDDLE

PROFESSIONAL SERIES, COMMERCIAL-DEPTH, PORCELAIN COOKTOP SURFACE

48-INCH RANGE CUTOUT DIMENSIONS

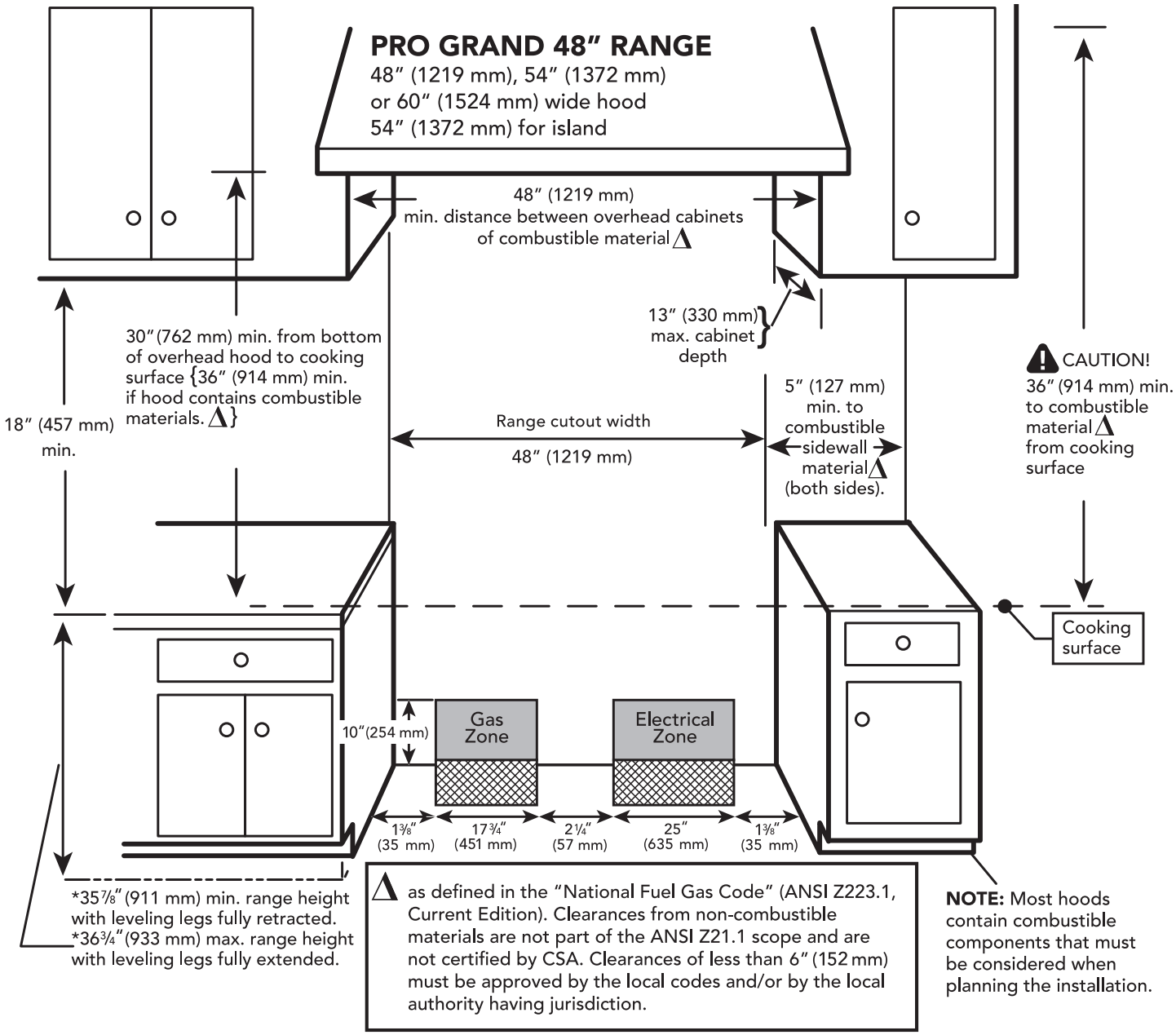

Δ as defined in the "National Fuel Gas Code" (ANSI Z223.1, Current Edition). Clearances from non-combustible materials are not part of the ANSI Z21.1 scope and are not certified by CSA. Clearances of less than 6" (152 mm) must be approved by the local codes and/or by the local authority having jurisdiction.

NOTE: Most hoods contain combustible components that must be considered when planning the installation.

PRD48WDSGU

48-INCH DUAL-FUEL PRO GRAND® RANGE WITH STEAM AND GRIDDLE

PROFESSIONAL SERIES, COMMERCIAL-DEPTH, PORCELAIN COOKTOP SURFACE

48-INCH RANGE DIMENSIONS AND CLEARANCE REQUIREMENTS WITH "LOW BACK"

NOTE: A 36-inch minimum clearance is required between the top of the cooking surface and the bottom of an unprotected cabinet. A 30-inch clearance can be used when the bottom of the wood or metal cabinet is protected by not less than **1/4** inch of a flame retardant material covered with not less than No. 28 MSG sheet steel, 0.015 inch (0.4 mm) thick stainless steel, 0.024 inch (0.6 mm) aluminum, or 0.020 inch (0.5 mm) thick copper.

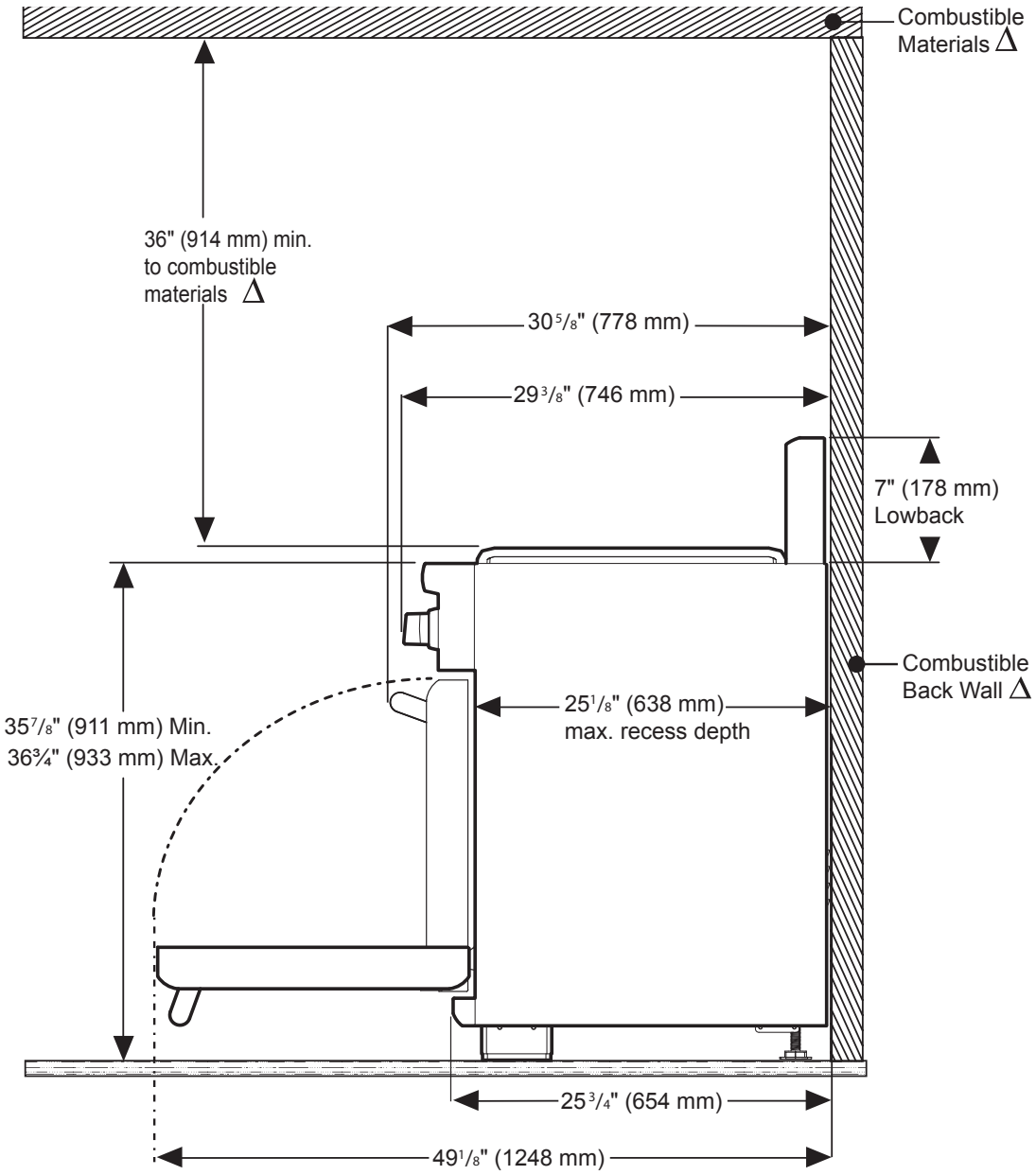

Δ As defined in the "National Fuel Gas Code" (ANSI Z223.1, Current Edition). Clearances from non-combustible materials are not part of the ANSI Z21.1 scope and are not certified by CSA. Clearances of less than 6" (152 mm) must be approved by the local codes and/or by the local authority having jurisdiction.

PRD48WDSGU

48-INCH DUAL-FUEL PRO GRAND® RANGE WITH STEAM AND GRIDDLE

PROFESSIONAL SERIES, COMMERCIAL-DEPTH, PORCELAIN COOKTOP SURFACE

48-INCH RANGE DIMENSIONS AND CLEARANCE REQUIREMENTS WITH "FLUSH ISLAND TRIM"

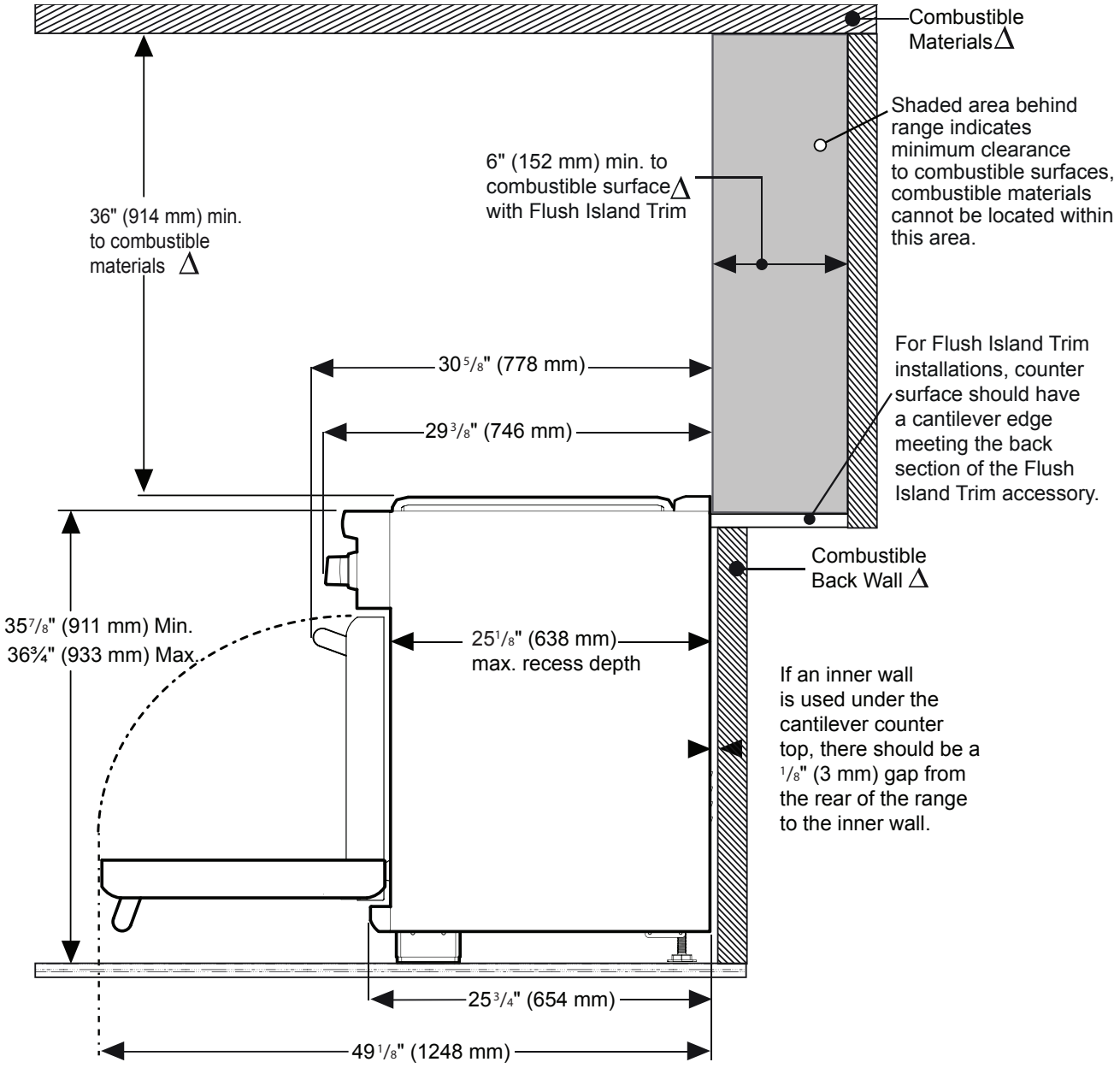

Δ As defined in the "National Fuel Gas Code" (ANSI Z223.1, Current Edition). Clearances from non-combustible materials are not part of the ANSI Z21.1 scope and are not certified by CSA. Clearances of less than 6" (152 mm) must be approved by the local codes and/or by the local authority having jurisdiction.

These warranties give you specific legal rights and you may have other rights that vary from state to state. Full warranty and limited warranty from date of installation. For complete warranty details, refer to your Use & Care manual, or ask your dealer.

Specifications are for planning purposes only. Refer to installation instructions and consult your countertop supplier prior to making counter opening. Consult with a heating and ventilation engineer for your specific ventilation requirements. For the most detailed information, refer to installation instructions accompanying product or write to Thermador indicating the model number. Specifications are correct at time of printing. Thermador reserves the right to change product specifications or design without notice. Some models are certified for use in Canada. Thermador is not responsible for products that are transported from the U.S. for use in Canada.

1 800 735 4328 | USA THERMADOR.COM | CANADA THERMADOR.CA | ©2020 BSH HOME APPLIANCES CORPORATION. ALL RIGHTS RESERVED.