CIT30XWBB
30-INCH FREEDOM® INDUCTION COOKTOP
MASTERPIECE® SERIES, DARK GRAY FRAMELESS

ADA COMPLIANT · C SA US · Home Connect

FEATURES & BENEFITS

- ★ - Largest 30" fully usable cooking surface on the market within it's class
- ★ - 48 inductor elements combined with pot detection automatically recognizes the size, shape and position of your cookware on the cooktop
- ★ - Wi-Fi connectivity allows the cooktop and matching hood to communicate with one another to synchronize turning on task lighting and ventilation
- ★ - TeppanyakiPro® function divides a teppanyaki griddle into one heated and one non-heated area
- ★ - Optional Cooking Sensor allows you to heat food, simmer, boil, cook with a pressure cooker and deep fry in a pot, all at a controlled temperature (sold separately)

GENERAL PROPERTIES	
Home Connect™ (Wi-Fi Enabled)	Yes
Controls	Full Color Touch Screen Display
ELEMENT PERFORMANCE	
Power of Full Surface Heating Element	3,500 W
Power of Full Surface Heating Element (In Boost)	5,500 W
Burners With Booster	All
COOKWARE SIZE (UP TO 5 POTS HEATED)	
Minimum Cookware Size*	3 1/2" x 3 1/2"
Maximum Cookware Size*	13"x 21"
TECHNICAL DETAILS	
Watts (W)	7,200 W
Circuit Breaker (A)	30 A
Volts (V)	208 / 240 V
Frequency (Hz)	50 / 60 Hz
Plug Type	No Plug
Conduit	39" Flexible 3-Wire
Energy Source	Electric
DIMENSIONS & WEIGHT	
Overall Appliance Dimensions (HxWxD) (in)	4 1/8" x 31" x 21 1/4"
Required Cutout Size (HxWxD) (in)	4 1/8" x 28 3/4" x 19 7/8"
Minimum Distance From Counter Front (in)	2 1/2"
Minimum Distance From Rear Wall (in)	2"
Net Weight (lbs)	65 lbs
WARRANTY	
Limited Warranty, Entire Appliance, Parts and Labor	2 Year

*Cookware must have a flat bottom in order to utilize the full surface. Only use ferromagnetic cookware for induction cooking.

ACCESSORIES (OPTIONAL)

CHEFSPAN08
10" Stainless Steel Pan

CHEFSPAN13
16" Round Skillet

TCOOKSENSW
Wireless Cooking Sensor

TGRILLPANX
Non-Stick Induction Grill
9" x 17"

TROASTERT
Stainless Steel
Roaster Pan
10" x 16"

TEPPAN1013
Griddle Style Teppanyaki
10"x 13"

TEPPAN1321
Griddle Style Teppanyaki
13" x 21"

TEPPAN1314
Griddle Style
Teppanyaki
13" x 14"

TEPPAN1016
Griddle Style Teppanyaki
10" x 16"

CIT30XWBB
30-INCH FREEDOM® INDUCTION COOKTOP
MASTERPIECE® SERIES, DARK GRAY FRAMELESS

30-INCH COOKTOP AND CUTOUT DIMENSIONS

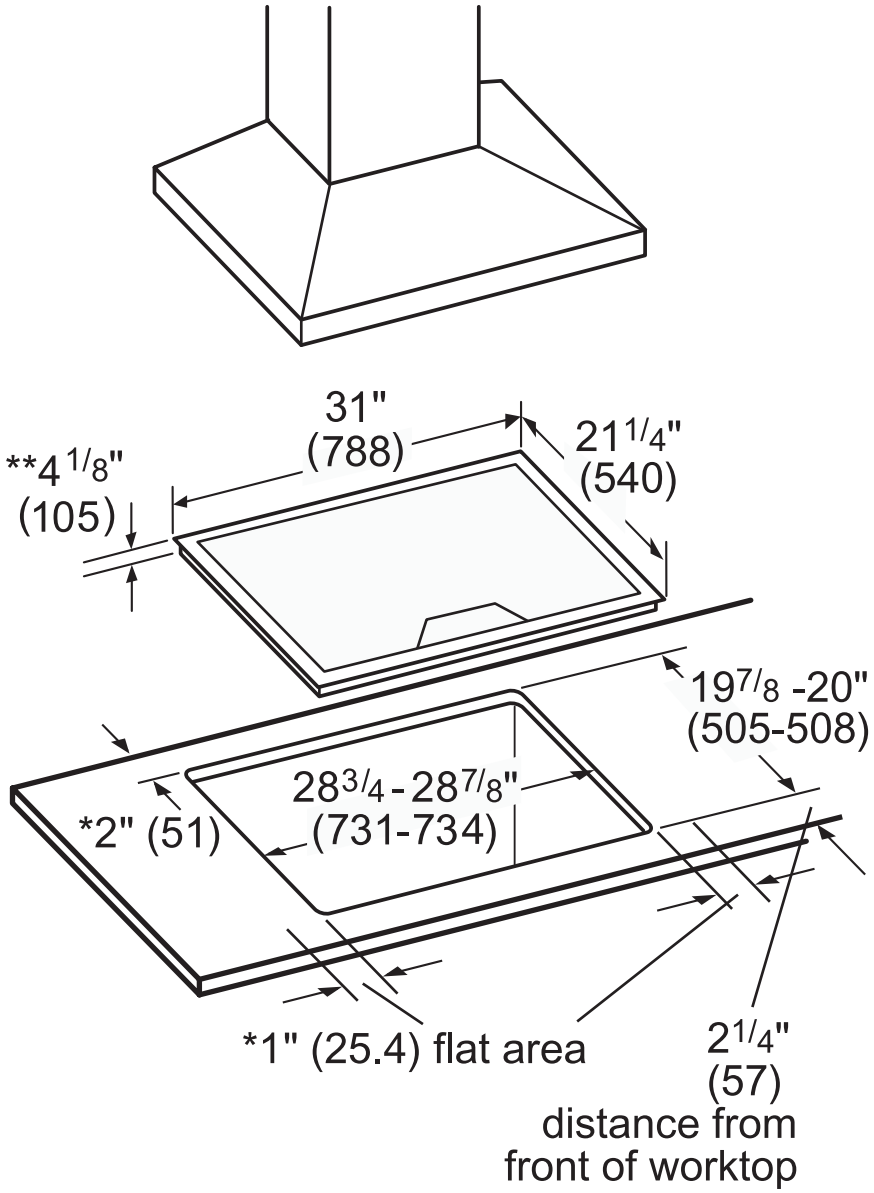

* Minimum distance from cutout to the wall
** Recessed depth (includes 1" air clearance)

Measurements in inches (mm in brackets)

NOTE: The work surface should be horizontal and level. The stability of the countertop should be confirmed even after making the cutout.

CIT30XWBB
30-INCH FREEDOM® INDUCTION COOKTOP
MASTERPIECE® SERIES, DARK GRAY FRAMELESS

INSTALLATION ABOVE A THERMADOR WALL OVEN

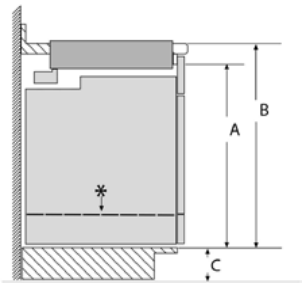

Product Type	A Inches (mm)	B min. Inches (mm)	C max. Inches (mm)
Conventional Oven	28 1/4 (718)	31 1/4 (794) min.	4 3/4 (121)
Steam Oven	25 1/16 (636)	28 1/16 (713)	7 15/16 (202)
Steam Oven with 4" Storage Drawer*	28 1/4 (718)	31 1/4 (794) min.	4 3/4 (121)
Microwave / Speed Oven	19 1/4 (488)	24 (609) min.	12" (306)
Microwave / Speed Oven with Warming drawer*	28 1/4 (718)	31 1/4 (794) min.	4 3/4 (121)

When installing an oven or oven with a drawer in combination with a cooktop, a minimum distance between the cabinet floor and countertop (B) is required. Reference the table for dimensions. Refer to the oven installation guide for all other measurements.

These warranties give you specific legal rights and you may have other rights that vary from state to state. Limited warranty from date of purchase. For complete warranty details, refer to your Use & Care manual, or ask your dealer.

Specifications are for planning purposes only. Refer to installation instructions and consult your countertop supplier prior to making counter opening. Consult with a heating and ventilation engineer for your specific ventilation requirements. For the most detailed information, refer to installation instructions accompanying product or write to Thermador indicating the model number. Specifications are correct at time of printing. Thermador reserves the right to change product specifications or design without notice. Some models are certified for use in Canada. Thermador is not responsible for products that are transported from the U.S. for use in Canada.

1 800 735 4328 | USA THERMADOR.COM | CANADA THERMADOR.CA | ©2020 BSH HOME APPLIANCES CORPORATION. ALL RIGHTS RESERVED.