PRG304WH
30-INCH GAS PRO HARMONY® RANGE
PROFESSIONAL SERIES, STANDARD-DEPTH, PORCELAIN COOKTOP SURFACE

FEATURES & BENEFITS

- ★ - Exclusive, Star® Burner—most even heating, unsurpassed flame coverage
- ★ - ExtraLow® feature provides a wide range of temperature control, perfect for simmering delicate sauces
- ★ - 2 ExtraLow® burners for simmering, melting, or holding long durations
- ★ - QuickClean Base® designed for easy surface cleaning
- - Convection Bake offers precise multi-level baking results

TECHNICAL DETAILS

Circuit Breaker	15 A
Volts	120 V, 60Hz
Energy Source	Gas
Plug Type USA	120V - 3 Prong
Power Cord Length	65" (1,651mm)
Gas Supply	3/4"

WARRANTY

Limited Warranty, Entire Appliance, Parts and Labor	2 Year

SEE PAGE 2 FOR INCLUDED AND OPTIONAL ACCESSORIES

RANGETOP

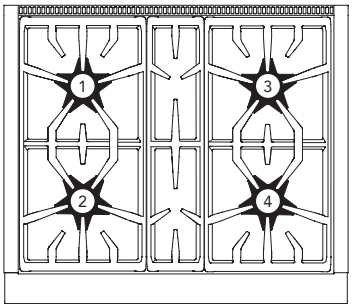

Total number of cooktop Burners	4
1 – Power of Back Left Burner BTU	15,000 and XLO
2 – Power of Front Left Burner BTU	18,000 and XLO
3 – Power of Back Right Burner BTU	15,000
4 – Power of Front Right Burner BTU	18,000

OVEN

Oven Capacity	4.6 cu. ft.
Cooking Modes	
Bake, Convection Bake, Roast, Broil, Extended Bake	
Sabbath	Yes (as Extended Bake – Knob Control)
Self Clean	No
Telescopic Rack(s)	1
Interior Lights	2
Bake Power	20,500 BTU
Broil Power	17,500 BTU
Home Connect™ (Wi-Fi Enabled)	No
Cavity Interior Dimensions (HxWxD)	16 1/2" x 26" x 18 5/8"
Cavity Usable Dimensions (HxWxD)	11 1/4" x 22 3/8" x 16 3/4"

DIMENSIONS & WEIGHT

Overall Appliance Dimensions (HxWxD)	35 3/4" – 36 3/4" x 29 15/16" x 24 5/8"
Required Cutout Size (HxWxD)	35 3/4" – 36 3/4" x 30" x 24"
Net Weight	368 lbs.

★ THERMADOR® EXCLUSIVE

PRG304WH
30-INCH GAS PRO HARMONY® RANGE
PROFESSIONAL SERIES, STANDARD-DEPTH, PORCELAIN COOKTOP SURFACE

ACCESSORIES (INCLUDED)

1 Telescopic Rack, 2 Standard Racks, 1 Lg. Broil Pan, Island Trim

ACCESSORIES (OPTIONAL)

PWOKRINGHC
Wok Ring

PAGRIDDLE
Professional Griddle, Sits on Top of Grates Over 2 Star Burners, High-Release Coating

PARKB3XHY
Metallic Blue Knob Kit

PAALTKITHW
High Altitude Kit, Natural Gas Pro Harmony Ranges, 5,400 ft. to 10,200 ft.

Contact Customer Support
High Altitude Kit, Gas or Dual-Fuel Pro Harmony Ranges Connected to LP Gas, 10,000 ft. to 10,200 ft.

PA12CHPBLK
Chopping Block / Cutting Board

PA30WLBH
Pro Harmony 7" Low Backguard*

PALPKITGW
LP Conversion Kit, Pro Harmony Gas Models with 4 and 6 Burners

*Models PCG305xx, PRD305xx, PRD606xx, PRG305xx, PRG304xx and PRD304xx are suitable for 0" rear clearance to combustible surfaces. All other models: when using the included Island Trim a minimum 6" (152 mm) rear clearance is required to a combustible surface. When installing against a combustible surface, a Thermador® Low Backguard is required for a 0" rear clearance to the combustible surface. A Thermador Low Backguard must be purchased separately. A rear clearance to a surface covered in a noncombustible material (metal, ceramic tile, brick, marble, or stone) is 0" when using the included Island Trim. Clearances of less than 6" (152 mm) should be approved by the local codes and/or by the local authority having jurisdiction. Clearances from non-combustible materials are not part of the ANSI Z21.1 scope and are not certified by CSA.

PRG304WH
30-INCH GAS PRO HARMONY® RANGE
PROFESSIONAL SERIES, STANDARD-DEPTH, PORCELAIN COOKTOP SURFACE

30-INCH RANGE DIMENSIONS

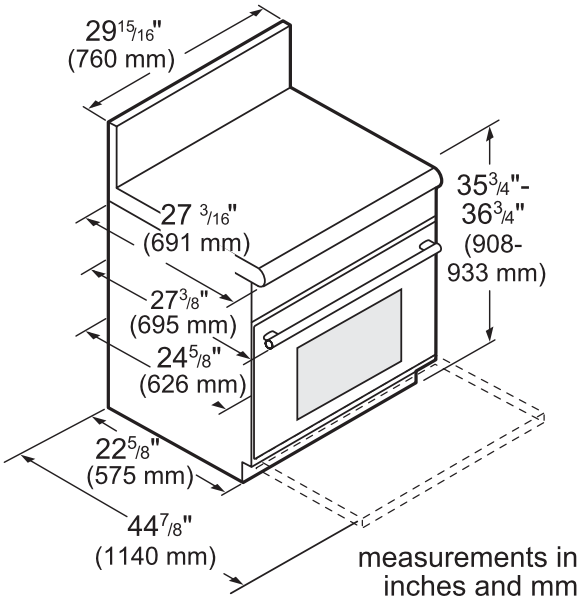

30-INCH RANGE CUTOUT DIMENSIONS

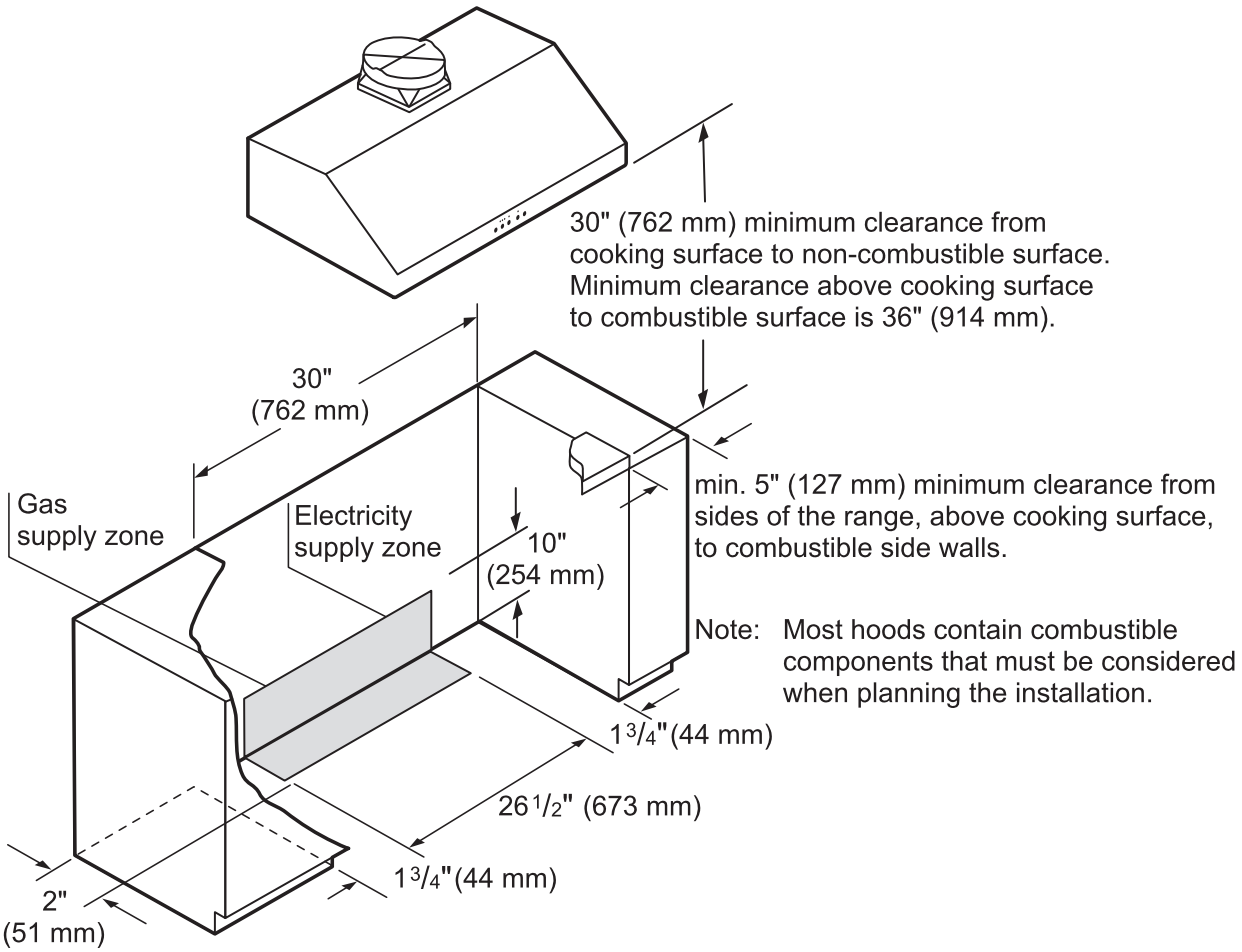

PRG304WH
30-INCH GAS PRO HARMONY® RANGE
PROFESSIONAL SERIES, STANDARD-DEPTH, PORCELAIN COOKTOP SURFACE

30-INCH RANGE CUTOUT DIMENSIONS

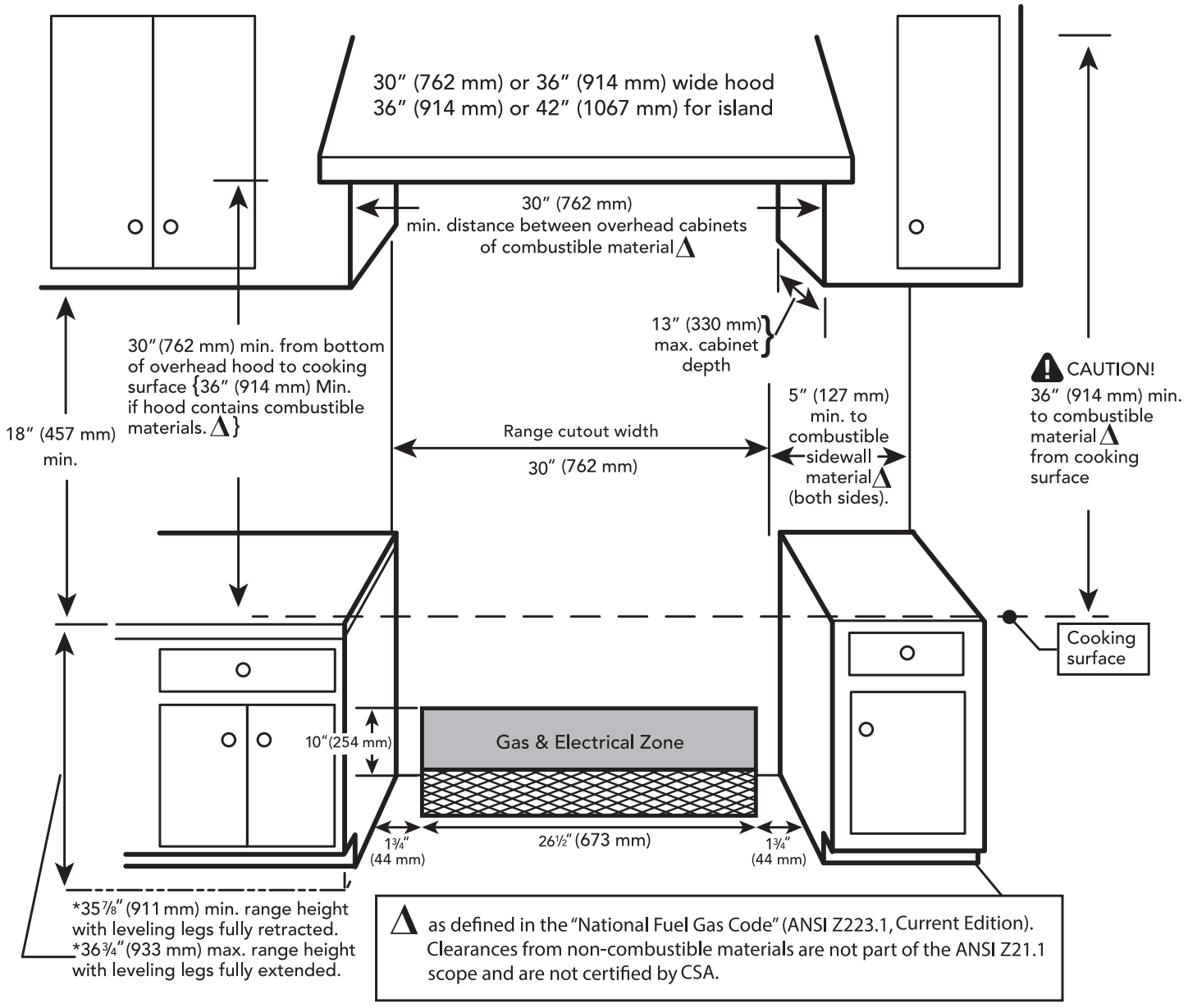

PRG304WH
30-INCH GAS PRO HARMONY® RANGE
PROFESSIONAL SERIES, STANDARD-DEPTH, PORCELAIN COOKTOP SURFACE

30-INCH RANGE DIMENSIONS AND CLEARANCE REQUIREMENTS WITH "LOW BACK"

NOTE: A 36-inch minimum clearance is required between the top of the cooking surface and the bottom of an unprotected cabinet. A 30-inch clearance can be used when the bottom of the wood or metal cabinet is protected by not less than 1/4 inch of a flame retardant material covered with not less than No. 28 MSG sheet steel, 0.015 inch (0.4 mm) thick stainless steel, 0.024 inch (0.6 mm) aluminum, or 0.020 inch (0.5 mm) thick copper.

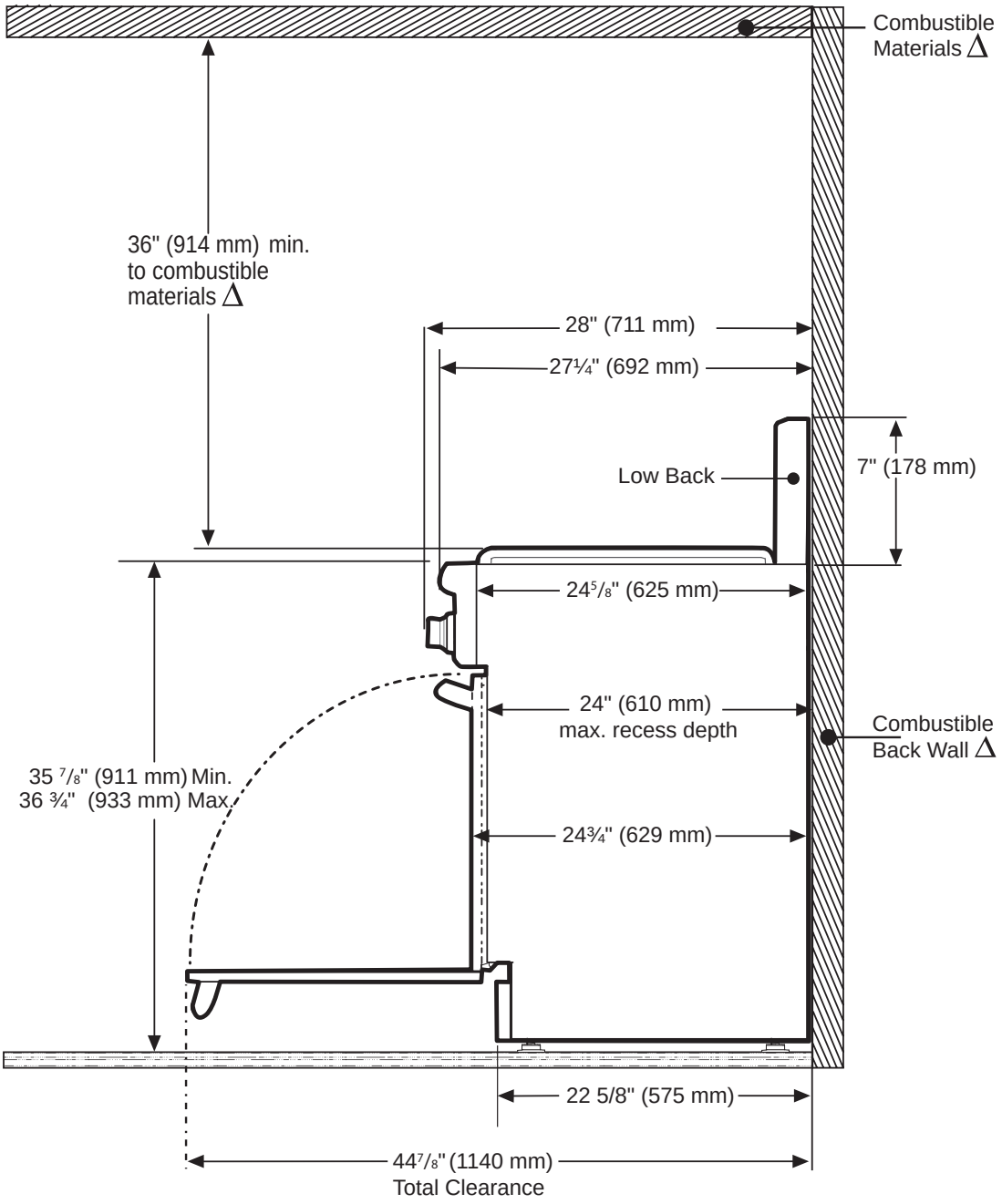

Δ As defined in the "National Fuel Gas Code" (ANSI Z223.1, Current Edition). Clearances from non-combustible materials are not part of the ANSI Z21.1 scope and are not certified by CSA.

PRG304WH
30-INCH GAS PRO HARMONY® RANGE
PROFESSIONAL SERIES, STANDARD-DEPTH, PORCELAIN COOKTOP SURFACE

30-INCH RANGE DIMENSIONS AND CLEARANCE REQUIREMENTS WITH "FLUSH ISLAND TRIM"

NOTE: A 36-inch minimum clearance is required between the top of the cooking surface and the bottom of an unprotected cabinet. A 30-inch clearance can be used when the bottom of the wood or metal cabinet is protected by not less than ¼ inch of a flame retardant material covered with not less than No. 28 MSG sheet steel, 0.015 inch (0.4 mm) thick stainless steel, 0.024 inch (0.6 mm) aluminum, or 0.020 inch (0.5 mm) thick copper.

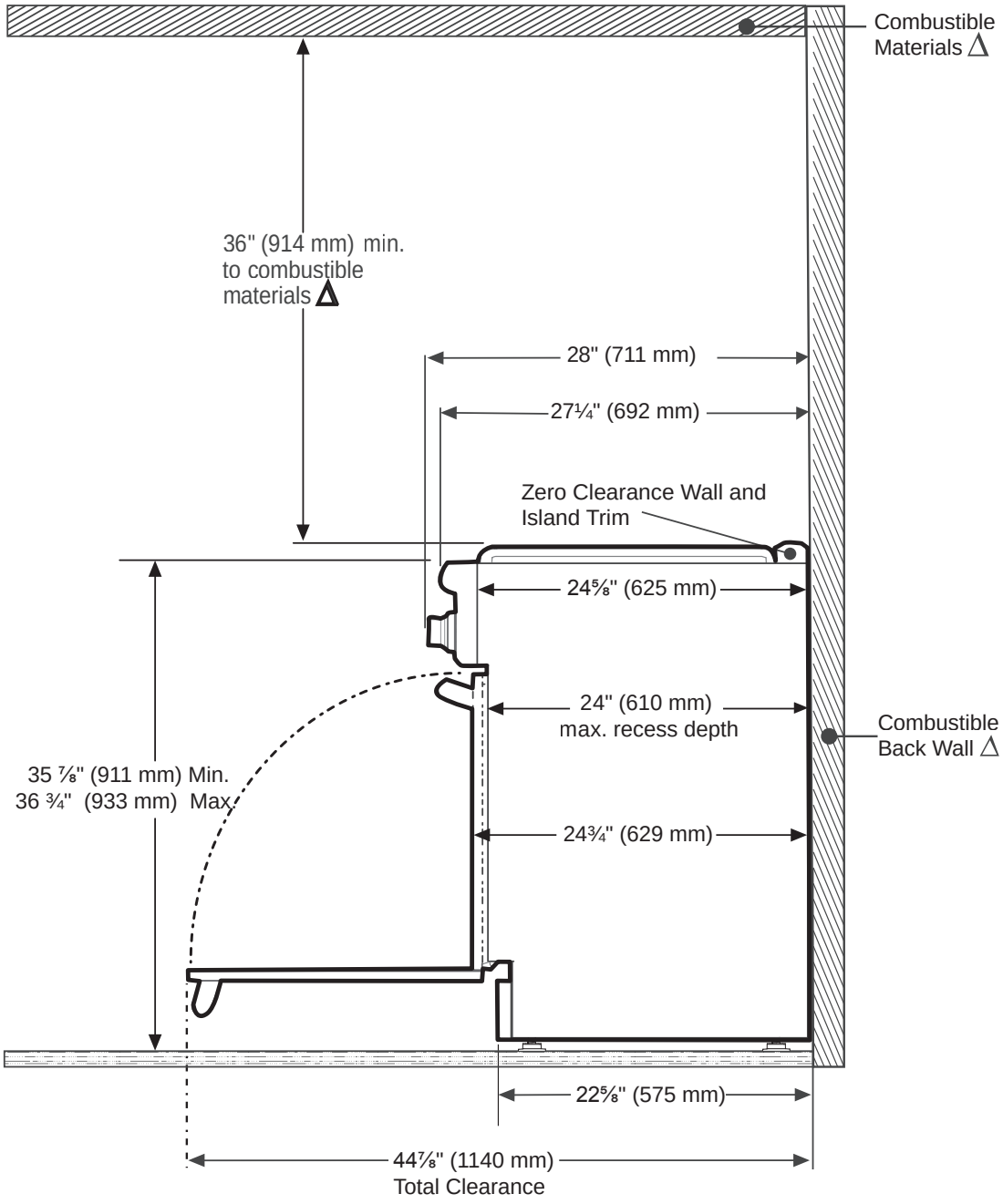

Δ as defined in the "National Fuel Gas Code" (ANSI Z223.1, Current Edition). Clearances from non-combustible materials are not part of the ANSI Z21.1 scope and are not certified by CSA.

These warranties give you specific legal rights and you may have other rights that vary from state to state. Full warranty and limited warranty from date of installation. For complete warranty details, refer to your Use & Care manual, or ask your dealer.

Specifications are for planning purposes only. Refer to installation instructions and consult your countertop supplier prior to making counter opening. Consult with a heating and ventilation engineer for your specific ventilation requirements. For the most detailed information, refer to installation instructions accompanying product or write to Thermador indicating the model number. Specifications are correct at time of printing. Thermador reserves the right to change product specifications or design without notice. Some models are certified for use in Canada. Thermador is not responsible for products that are transported from the U.S. for use in Canada.

1 800 735 4328 | USA THERMADOR.COM | CANADA THERMADOR.CA | ©2020 BSH HOME APPLIANCES CORPORATION. ALL RIGHTS RESERVED.