USER GUIDE & SERVICE MANUAL

SAFETY • INSTALLATION & INTEGRATION • OPERATING INSTRUCTIONS • MAINTENANCE • SERVICE

2000 Series • 2224WC • 24" Single Zone Wine Captain®

Tip: Click on any section below to jump directly there

Contents

Intro

Safety

Safety and Warning
Disposal And Recycling

Installation

Environmental Requirements
Electrical
Cutout Dimensions
Product Dimensions
Side by Side Installation
Anti-Tip Bracket
General Installation
Integrated Grille / Plinth Dimensions
Grille / Plinth Installation
Door Swing
Door Stop
Door Adjust
Wood Trim Finishing

Operating Instructions

First Use
Control Operation
Sabbath Mode
Airflow and Product Loading
U-Line Wine Guide
Recommended Wine Storage

Maintenance

Cleaning
Cleaning Condenser
Extended Non-Use

Service

Troubleshooting
Wire Diagram
Product Liability
Warranty Claims
Parts
Ordering Replacement Parts
R600a Specifications
System Diagnosis Guide
Compressor Specifications
Troubleshooting Extended
Control Operation - Service
Thermistor
Defrost
Remove Fan and Cover
Warranty

WELCOME TO U-LINE

Congratulations on your U-Line purchase. Your product comes from a company with over five decades of premium modular ice making, refrigeration, and wine preservation experience. U-Line continues to be the American leader, delivering versatility and flexibility for multiple applications including residential, light commercial, outdoor and marine use. U-Line's complete product collection includes Wine Captain® Models, Beverage Centers, Clear Ice Machines, Crescent Ice Makers, Glass & Solid Door Refrigerators, Drawer Models, Freezers, Combo® Models, and more.

U-Line has captivated those with an appreciation for the finer things with exceptional functionality, style, inspired innovations and attention to even the smallest details. We are known and respected for our unwavering dedication to product design, quality and selection. U-Line is headquartered in Milwaukee, Wisconsin and has shipped product to five continents for over two decades and is proud to have the opportunity to ship to you.

PRODUCT INFORMATION

Looking for additional information on your product? User Guides, Spec Sheets, CAD Drawings, Compliance Documentation, and Product Warranty information are all available for reference and download at u-line.com.

PROPERTY DAMAGE / INJURY CONCERNS

In the unlikely event property damage or personal injury is suspected related to a U-Line product, please take the following steps:

1. U-Line Customer Care must be contacted immediately at +1.800.779.2547.
2. Service or repairs performed on the unit without prior written approval from U-Line is not permitted. If the unit has been altered or repaired in the field without prior written approval from U-Line, claims will not be eligible.

GENERAL INQUIRIES

U-Line Corporation
8900 N. 55th Street
Milwaukee, Wisconsin 53223 USA
Monday - Friday 8:00 am to 4:30 pm CST
T: +1.414.354.0300
F: +1.414.354.7905
Email: sales@u-line.com
u-line.com

SERVICE & PARTS ASSISTANCE

Monday - Friday 8:00 am to 4:30 pm CST
T: +1.800.779.2547
F: +1.414.354.5696
Service Email: onlineservice@u-line.com
Parts Email: onlineparts@u-line.com

CONNECT WITH US

blog

Designed, engineered and assembled in WI, USA

Safety and Warning

NOTICE

Please read all instructions before installing, operating, or servicing the appliance.

Use this appliance for its intended purpose only and follow these general precautions with those listed throughout this guide:

SAFETY ALERT DEFINITIONS

Throughout this guide are safety items labeled with a Danger, Warning or Caution based on the risk type:

DANGER

Danger means that failure to follow this safety statement will result in severe personal injury or death.

WARNING

Warning means that failure to follow this safety statement could result in serious personal injury or death.

CAUTION

Caution means that failure to follow this safety statement may result in minor or moderate personal injury, property or equipment damage.

DANGER

This unit contains R600a (Isobutane) which is a flammable hydrocarbon. It is safe for regular use. Do not use sharp objects to expedite defrosting. Do not service without consulting the "R600a specifications" section included in the User Guide. Do not damage the refrigerant circuit.

WARNING

Service must be done by factory authorized service personnel. Any parts shall be replaced with like components. Failure to comply could increase the risk of possible ignition due to incorrect parts or improper service.

Disposal and Recycling

DANGER

RISK OF CHILD ENTRAPMENT. Before you throw away your old refrigerator or freezer, take off the doors and leave shelves in place so children may not easily climb inside.

If the unit is being removed from service for disposal, check and obey all federal, state and local regulations regarding the disposal and recycling of refrigeration appliances, and follow these steps completely:

1. Remove all consumable contents from the unit.

2. Unplug the electrical cord from its socket.

3. Remove the door(s)/drawer(s).

Environmental Requirements

This model is intended for indoor/interior applications only and is not to be used in installations that are open/exposed to natural elements.

This unit is designed to operate between 50°F (10°C) and 100°F (38°C). Higher ambient temperatures may reduce the unit's ability to reach low temperatures and/or reduce ice production on applicable models.

For best performance, keep the unit out of direct sunlight and away from heat generating equipment.

In climates where high humidity and dew points are present, condensation may appear on outside surfaces. This is considered normal. The condensation will evaporate when the humidity drops.

⚠ CAUTION

Damages caused by ambient temperatures of 40°F (4°C) or below are not covered by the warranty.

Electrical

WARNING

SHOCK HAZARD — Electrical Grounding Required. Never attempt to repair or perform maintenance on the unit until the electricity has been disconnected.

Never remove the round grounding prong from the plug and never use a two-prong grounding adapter.

Altering, cutting or removing power cord, removing power plug, or direct wiring can cause serious injury, fire, loss of property and/or life, and will void the warranty.

Never use an extension cord to connect power to the unit.

Always keep your working area dry.

NOTICE

Electrical installation must observe all state and local codes. This unit requires connection to a grounded (three-prong), polarized receptacle that has been placed by a qualified electrician.

The unit requires a grounded and polarized 115 VAC, 60 Hz, 15A power supply (normal household current). An individual, properly grounded branch circuit or circuit breaker is recommended. A GFCI (ground fault circuit interrupter) is usually not required for fixed location appliances and is not recommended for your unit because it could be prone to nuisance tripping. However, be sure to consult your local codes.

See CUTOUT DIMENSIONS for recommended receptacle location.

Cutout Dimensions

PREPARE SITE

Your U-Line product has been designed exclusively for a built-in installation. When built-in, your unit does not require additional air space for top, sides, or rear. However, the front grille (plinth strip/base fascia) must NOT be obstructed.

⚠ CAUTION

Unit can NOT be installed behind a closed cabinet door.

U-Line products are designed and manufactured to be installed in the specified cutout openings shown, and variance to the floors or cabinetry must be accounted for in your installation.

CUTOUT DIMENSIONS

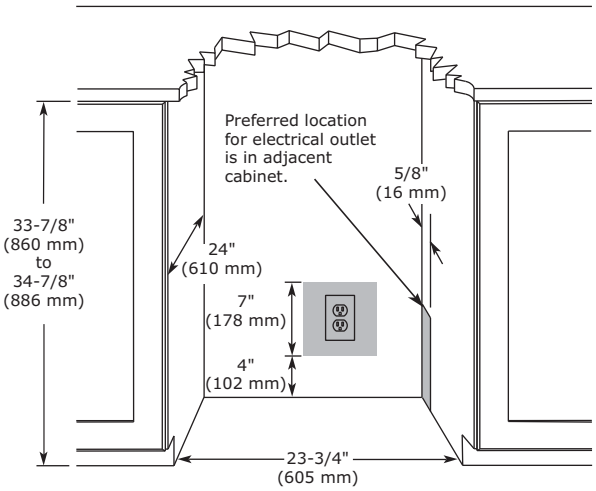

Metric measurements rounded and optimized.

Product Dimensions

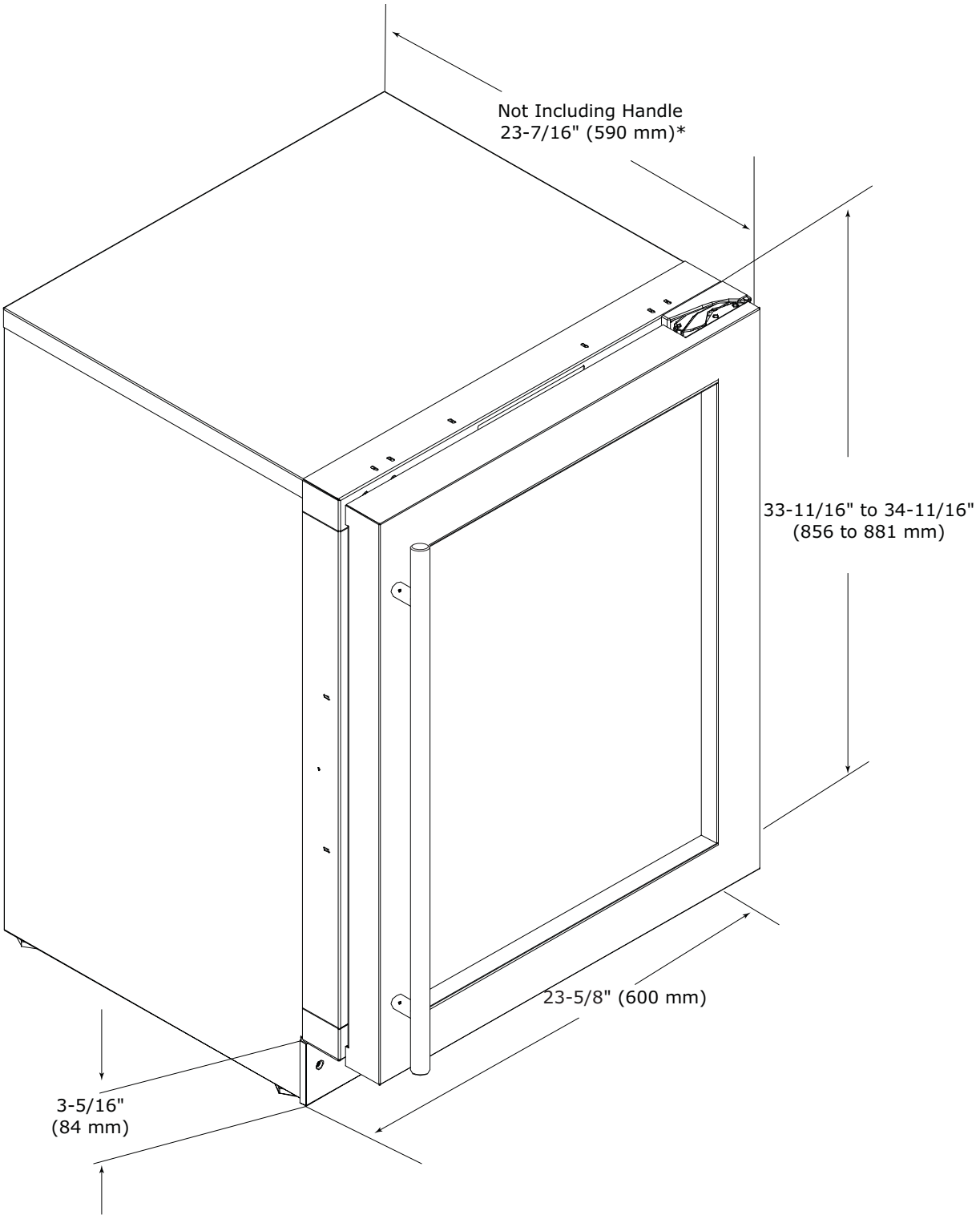

Side-by-Side Installation

OTHER SITE REQUIREMENTS

Side-by-Side Installation

Units must operate from separate, properly grounded electrical receptacles placed according to each unit's electrical specifications requirements.

Cutout width for a side-by-side installation is the total of the widths listed under Cutout Dimensions in each unit's Installation Guide. Each door can be opened individually (one at a time) without interference.

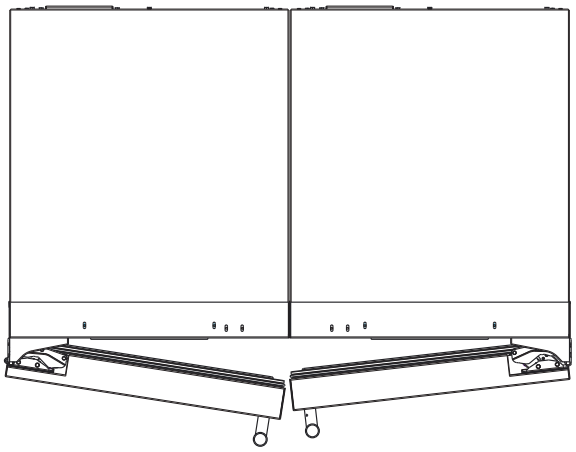

However, to ensure unobstructed door swing (opening both doors at the same time), 1/4" (6.4 mm) of space needs to be maintained between the units.

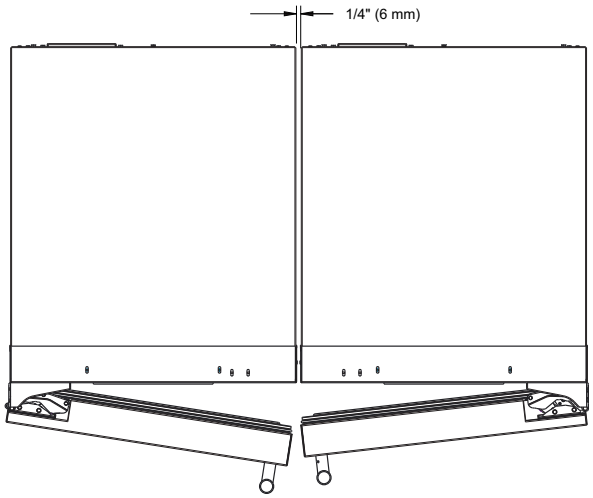

Hinge-by-Hinge Installation (Mullion)

When installing two units hinge-by-hinge, 13/16" (22 mm) is required for integrated models. Additional space may be needed for any knobs, pulls or handles installed.

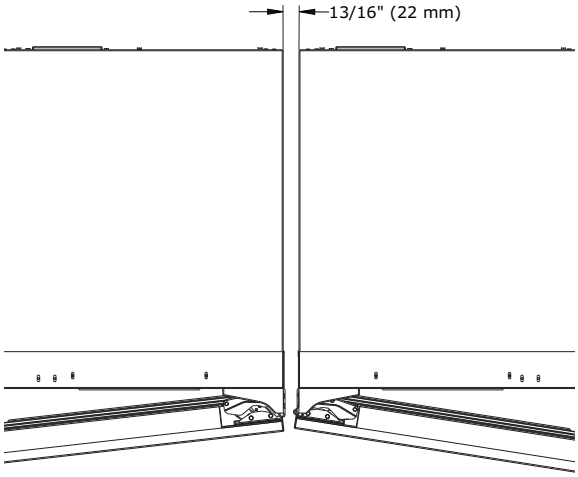

Stainless steel models which include the standard stainless handle will require 4-9/16" (116 mm) to allow both doors to open to 90° at the same time.

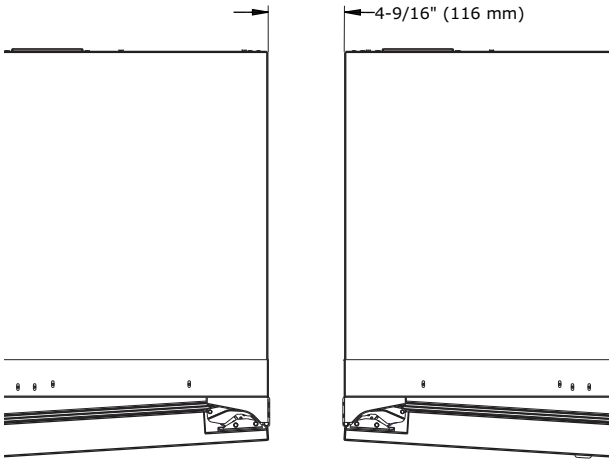

Anti-Tip Bracket

⚠ CAUTION

The anti-tip bracket must be installed to prevent the unit from tipping when doors are fully opened or excess weight is placed on the front of the unit.

The anti-tip bracket has multiple mounting options. Mounting will depend on your particular cabinet configuration. Locate 3 #8x5/8" screws included with your unit.

TOP MOUNT

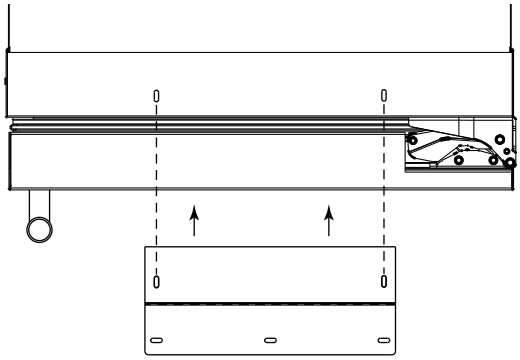

For ease of installation, the anti-tip bracket is pre-installed in the top mount position.

1. Completely slide the unit into its position in the cabinet. Be certain unit height is properly adjusted. (See GENERAL INSTALLATION).

2. Open door completely. Make certain door clears surrounding cabinetry.

3. Using a 3/32" (2.50 mm) drill bit, drill 3 pilot holes 5/8" (16 mm) deep into bottom of counter top. Use the anti-tip bracket as a template.

4. Install 3 #8x5/8" screws into the plate using a #2 Phillips head screwdriver.

SIDE MOUNT

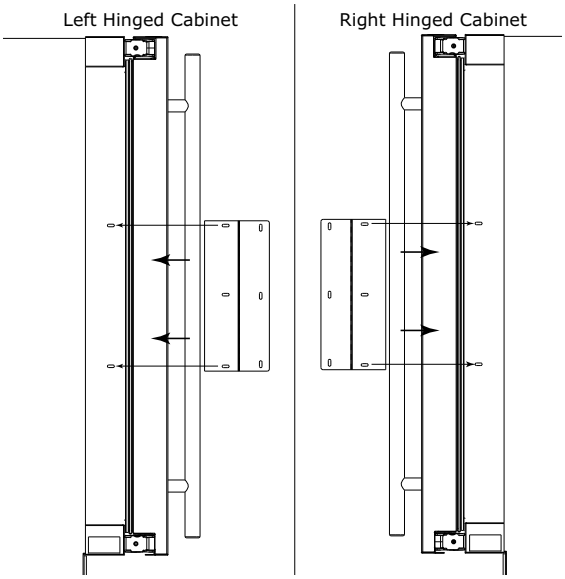

Side mount position is used when you are unable to mount the bracket to the underside of your countertop.

1. Remove the pre-installed anti-tip bracket from the top mount position and align the bracket to the hinge side of the unit as shown above.

2. Reinstall the 2 #8x5/8" screws into the plate using a #2 Phillips head screwdriver.

3. Completely slide the unit into its position in the cabinet. Be certain unit height is properly adjusted. (See GENERAL INSTALLATION).

4. Open door completely. Make certain door clears surrounding cabinetry.

5. Using a 3/32" (2.50 mm) drill bit, drill 3 pilot holes 5/8" (16 mm) deep into cabinetry frame using the anti-tip bracket as a template.

6. Install 3 #8x5/8" screws into the plate using a #2 Phillips head screwdriver.

General Installation

LEVELING INFORMATION

1. Use a level to confirm the unit is level. Level should be placed along top edge and side edge as shown.

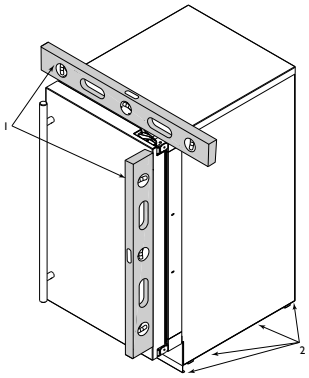

2. If the unit is not level, remove grille and adjust legs as necessary.

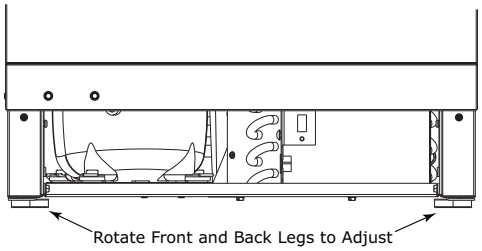

3. Confirm the unit is level after each adjustment and repeat the previous steps until the unit is level.

INSTALLATION TIP

If the room floor is higher than the floor in the cutout opening, adjust the rear legs to achieve a total unit rear height of 1/8" (3 mm) less than the opening's rear height. Shorten the unit height in the front by adjusting the front legs. This allows the unit to be gently tipped into the opening. Adjust the front legs to level the unit after it is correctly positioned in the opening.

INSTALLATION

1. Plug in the power/electrical cord.
2. Gently push the unit into position. Be careful not to entangle the cord.
3. Re-check the leveling, from front to back and side to side. Make any necessary adjustments. The unit's top surface should be approximately 1/8" (3 mm) below the countertop.
4. Install the anti-tip bracket.
5. Remove the interior packing material and wipe out the inside of the unit with a clean, water-dampened cloth.

Integrated Grille - Plinth Dimensions

PREPARE AND INSTALL INTEGRATED GRILLE (PLINTH STRIP/BASE FASCIA)

1. Use the dimensions provided in the diagram to cut and shape your integrated grille (plinth strip/base fascia) panel. Recommended panel thickness is between 1/4" (6 mm) and 3/8" (9 mm).

2. Finish or stain your grille (plinth strip/base fascia) panel to match your surrounding furniture. Finish front, back and edges to prevent warping. Carefully follow the manufacturer's recommendations for finish application and cure times.

3. Apply double sided tape to the backside of the integrated grill (plinth strip/base fascia). Use the diagram below for reference. U-Line recommends 3M™ VHB™ tape, a high strength bonding tape.

Apply Tape To Shaded Area

4. Remove backing paper from double sided tape.

5. Carefully align grille (plinth strip/base fascia) over integrated panel and press into position.

INTEGRATED GRILLE (PLINTH STRIP/BASE FASCIA) DIMENSIONS

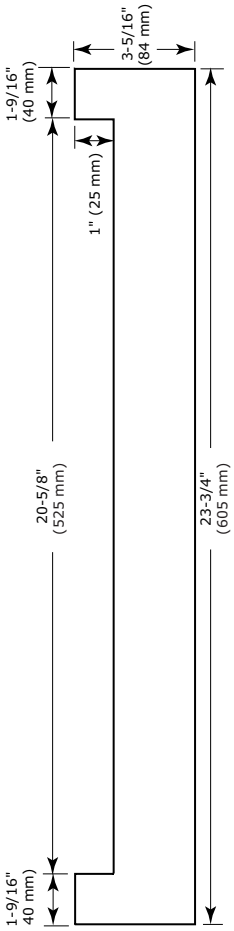

Grille - Plinth Installation

REMOVING AND INSTALLING GRILLE (PLINTH STRIP/BASE FASCIA)

⚠ WARNING

Disconnect electric power to the unit before removing the grille (plinth strip/base fascia).

When using the unit, the grille (plinth strip/base fascia) must be installed.

⚠ WARNING

DO NOT touch the condenser fins. The condenser fins are SHARP and can be easily damaged.

Removing the grille (plinth strip/base fascia)

1. Disconnect power to the unit.
2. Loosen the two screws (1).
3. Remove grille (plinth strip/base fascia) (2) from unit.

Installing the grille

1. Align cabinet and grille holes and secure, but do not over tighten grille (plinth strip/base fascia) screws (1).
2. Reconnect power to the unit.

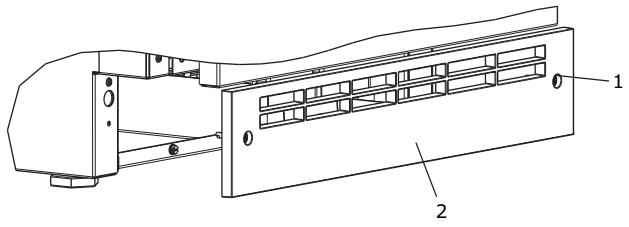

Door Swing

For Integrated models that are installed adjacent to a wall, 1/2" (13 mm) clearance is recommended from wall on hinge side to allow the door to open 90°. Allow for additional space for any knobs or pulls installed on the integrated panel/frame.

Stainless Steel models that are installed adjacent to a wall require 2-1/4" (57 mm) door clearance on hinge side to allow for door handle.

Units have a zero clearance when installed adjacent to cabinets.

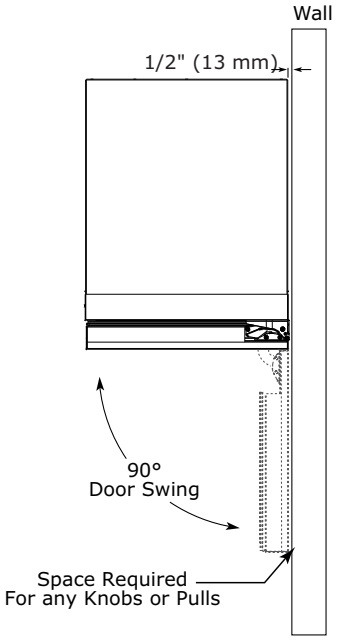

Integrated

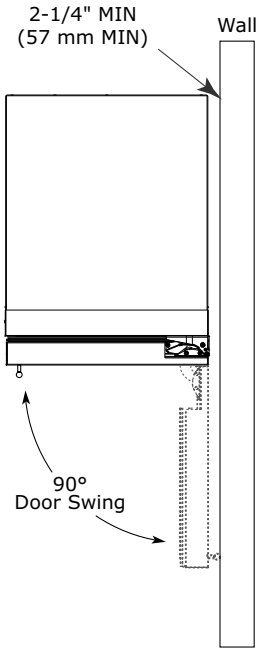

Stainless

Door Stop

Your U-Line unit was shipped to you with the optional 90° pin.

Your unit's door(s) will open 115° straight from the factory. If you would like the door stop at 90° follow these instructions.

NOTICE

If your unit is already undercounter, it will need to be moved out to access the hinge. With the 90° stop pin in place, you will not be able to replace the hinge cover.

1. Open door approximately 90°.

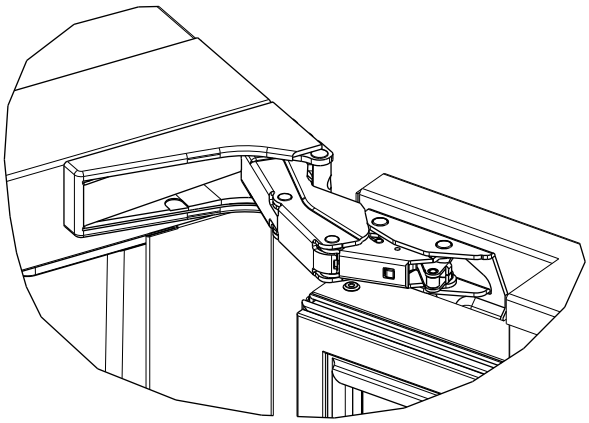

2. Remove hinge cover by lifting top and bottom of hinge cover and sliding the cover inwards to remove from hinge.

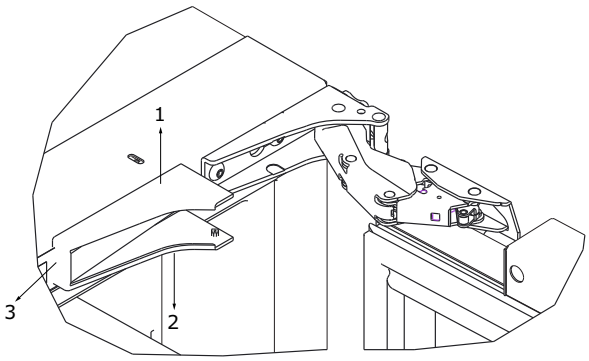

3. Once cover is removed, slide hinge pin into hole as shown. Pin should slide into place, stopping the door at 90°; if the pin does not go into the hole shown, hold the door less than 90° open and try again.

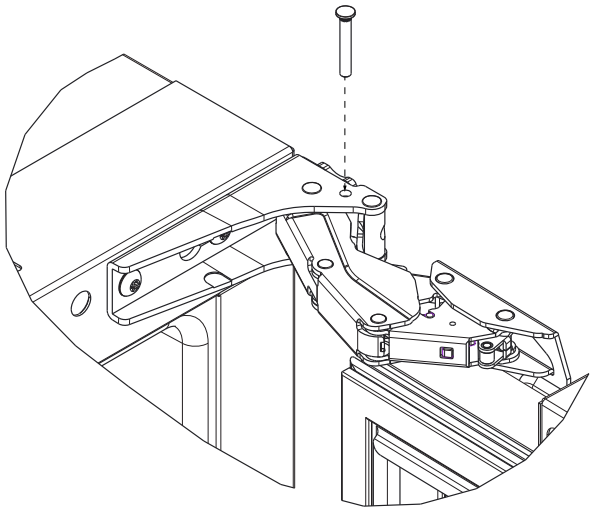

4. To fully seat the pin, tap it lightly with a hammer.

5. Carefully slide your unit back in place.

NOTICE

The pin can be removed to return the door swing back to its original 115° swing by tapping the pin out from the bottom of the hinge.

CLOSER

The door hinge has a self-closing feature that engages when the door is open approximately 6" (150 mm) (about 25°).

Door Adjustments

DOOR ALIGNMENT AND ADJUSTMENT

Align and adjust the door if it is not level or is not sealing properly. If the door is not sealed, the unit may not cool properly, or excessive frost or condensation may form in the interior.

NOTICE

Properly aligned, the door's gasket should be firmly in contact with the cabinet all the way around the door (no gaps). Carefully examine the door's gasket to ensure that it is firmly in contact with the cabinet. Also make sure the door gasket is not pinched on the hinge side of the door.

⚠ CAUTION

Do not attempt to use the door to raise or pivot your unit. This would put excessive stress on the hinge system.

Alignment and Adjustment Procedure

1. Open door and remove gasket near the hinges.
2. Using a T-25 Torx Bit, loosen each pair of Torx head screws on both the upper and lower hinge plates.
3. Square and align door as necessary.
4. Tighten Torx head screws on hinge.
5. Reinstall gasket into the channel starting at the corner.

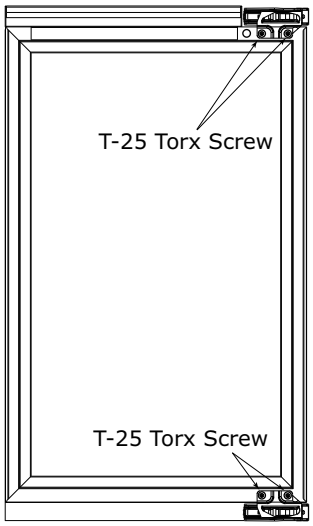

REVERSING THE DOOR

1. Open door.
2. Remove top hinge cover by lifting top and bottom flaps and slide inwards. Repeat on bottom hinge.

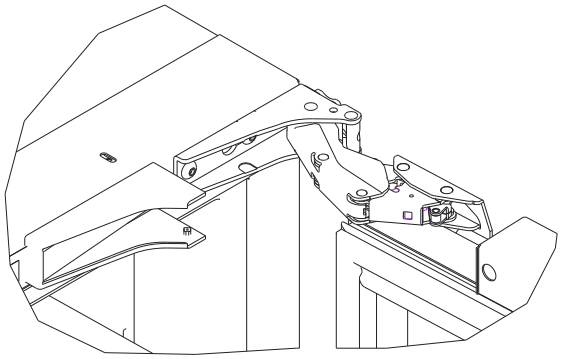

3. Using T-25 Torx bit loosen screw #1 and remove screw #2 on top and bottom hinge. Slide and remove the door from unit. Completely remove screw #1 on top and bottom.

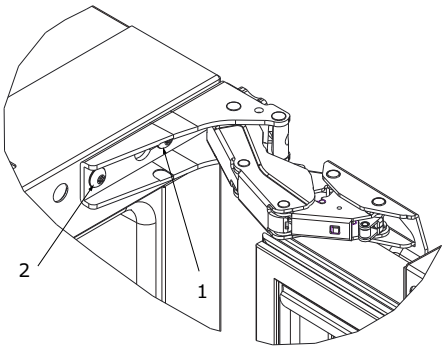

4. Remove caps from screw heads on opposite side (2 on top and 2 on bottom). Using #2 Phillips bit remove the 4 underlying screws. Reinstall the screws and caps on the opposite side.

5. Partially install screw #1 in the outer most holes on top and bottom. Rotate door 180°, align hinge over screw #1 and slide/seat into position. Reinstall screw #2 on top and bottom. Tighten both screws and install hinge cover.

Align and adjust the door:

Align and adjust the door (see DOOR ALIGNMENT AND ADJUSTMENT).

Wood Trim Finishing

The wine rack fronts are solid natural beech wood. They are factory coated with a clear vinyl sealer, which will sufficiently protect the wood in normal use.

You may coat the trim with stain and/or a final finish to match surrounding cabinetry.

⚠ CAUTION

You MUST remove the wood trim from the unit for staining or finishing to prevent permanent damage to the inner liner of the unit. Allow stain or finish to dry thoroughly (at least 24 hours for each coat) following the product manufacturer's instructions before reinstallation. Not following this warning may cause the inner liner of the unit to have a permanent odor, which the warranty will not cover.

U-Line recommends Minwax® Brand Water Based Stains and Minwax Polycrylic® Protective Finish.

NOTICE

Never use oil based stains or finishes.

On glass door models, the stain may appear darker when viewed through the glass.

Follow the manufacturers instructions for the stain and/or finish you select.

First Use

All U-Line controls are preset at the factory. Initial startup requires no adjustments.

NOTICE

U-Line recommends allowing the unit to run overnight before loading with product.

When plugged in, the unit will begin operating under the factory default settings. If the unit was turned off during installation, simply press ⏻ and the unit will immediately switch on. To turn the unit off, press ⏻.

Control Operation

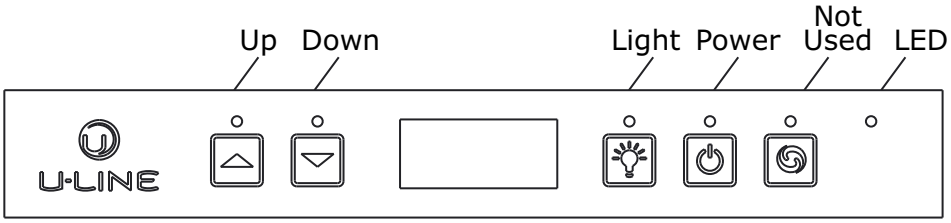

CONTROL FUNCTION GUIDE

FUNCTION	COMMAND	DISPLAY/OPTIONS
ON/OFF	Press ⏻ and release	Unit will immediately turn ON or OFF.
Toggle lights	Press 💡 and release to leave interior light on for 3 hours	Glass door wine and beverage centers only.
Adjust refrigerator set point	Press ⌃ or ⌄ and release	When the “F” or “C” in the display is flashing, press ⌃ or ⌄ to adjust the set point temperature.
View temperature in unit	Press ⌃ and ⌄ together and release	The display will flash and then toggle from set point to temperature in unit.
Toggle between F/C	Hold ⌃ and ⌄ for 5 seconds	The display will change units.

DOOR ALERT NOTIFICATION

When the door is left open for more than 5 minutes:

- An audible tone will sound for several seconds every minute.
- “dr” will appear in display.

Close door to silence alert and reset.

Sabbath Mode

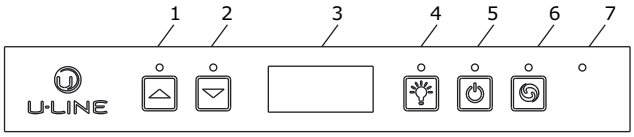

This unit is Star-K certified and offers a Sabbath mode. Sabbath mode disables system responses to user initiated activities and all external functions, including lighting, display and audible alarms. The unit will still maintain internal temperatures and set points. View a full list of Star-K certified U-Line units at www.star-k.org.

To enable Sabbath Mode:

1. Press (4) and hold for ten seconds and release (the °F/°C symbol will flash briefly at the end of the ten second period).

2. The interior light and control display (3) will go dark until user resets mode.

3. NOTE: Although the display will not be visible, the temperature controls in the unit remain active and preserve the interior temperature.

Sabbath Mode remains active until (4) is quickly pressed and released.

Airflow and Product Loading

NOTICE

The unit requires proper airflow to perform at its highest efficiency. Do not block the front grille, or the unit will not perform as expected. Do not install the unit behind a door. When loading your unit, leave space between the evaporator and product loaded. Anything in direct contact with the evaporator is subject to freezing.

When properly loaded, your U-Line unit will store up to 43 (750 ml) bottles of wine.

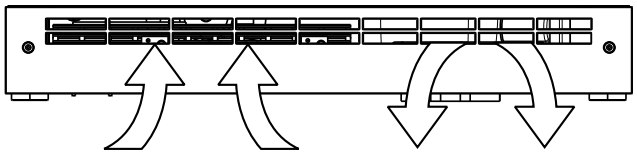

U-Line Wine Guide

LOOKING BEHIND THE LABEL

To most, wine is a delicious mystery. We purchase it, uncork it, and savor its taste and beauty. But there is so much more to true wine appreciation. Many secrets are simply too good to keep bottled up.

WINE SELECTIONS SUGGESTIONS

Selecting the right wine for the right occasion can sometimes be a seemingly awkward or difficult task for the beginning wine enthusiast. We would therefore like to present you with a few suggestions which may provide a little more confidence and enjoyment when choosing and serving your wines.

When selecting wines, keep an open mind and do not be afraid to be adventurous. Do not view the subject of wine so seriously it discourages you from learning and discovering for fear of embarrassment if something is incorrect. Wine is best viewed as a hobby and enjoyed.

When assembling your collection, try not to become obsessed with "Vintages." Although a chart can be a useful tool, generalizations about a specific year have led more than one collector to disappointment. Often an "Off Year" will provide a better value and more drinking enjoyment.

The primary guideline to the subject of wine is your own palate. Do not be afraid to make mistakes. Experiment, discover, but most of all, enjoy yourself and your new U-Line product.

Guide To Common Styles Of Wine

Red Wines		
Full-Bodied Dry	California French Italian	Zinfandel, Cabernet Rhone, Chateauneuf-du-Pape Barbaresco, Barolo
Medium-Bodied Dry	California French	Pinot Noir Bordeaux, Burgundy
Light-Bodied Dry	French Italian	Beaujolais Chianti, Bardolino
White Wines		
Full-Bodied Dry	California French	Chardonnay Montrachet, Meursault Puligny-Montrachet
Medium-Bodied Dry	California French	Sauvignon-Blanc Pouilly-Fuisse, Sancerre, Vouvray, Graves
Light-Bodied Dry	French	Chablis, Muscadet, Pouilly-Fume
Full-Bodied, Very Sweet	Germany French Hungary	Beerenauslese Sauternes Tokay
Medium-Bodied, Semi-Sweet	California Germany	Gewurtztraminer Liebfraumilch
Light-Bodied Off Dry	Germany	Rhine, Mosel, Riesling

Matching Food and Wine

Although there are no hard fast rules for matching wine to food, observe some guidelines. Delicate dishes should be accompanied by lighter more delicate wines. Full-flavored foods should be matched with fuller-bodied wines.

As a general rule, one should aim to ascend in flavor and quality of wines served.

Serve a:	Before a:
DRY wine	SWEET wine
WHITE wine	RED wine
YOUNG wine	OLD wine
LIGHT-BODIED wine	FULL-BODIED wine

Any step back in quality will be noticed. If a fine wine is tasted prior to a lesser wine, many of the fine wine's subtle qualities may be missed.

Common Food and Wine Matches

Foods	Wines
Fish, Shell Fish, Crab, Oysters	Dry White Wines, Light Sparkling or Extra Dry Champagne
Beef, Venison	Full-Bodied Red Wines
Pork, Veal, Lamb and Poultry	Light-Bodied Red Wines
Fruit	Sweet White and Sparkling Wines

A Toast to Wine Truths

Like the grapes themselves, many wine myths have been cultivated over the centuries.

Myth 1: Most wines taste better when aged.

Truth: In fact, less than 5% of wines produced today are meant to be aged. Most wines are crafted to be consumed within the first one to two years.

Myth 2: Wines should be uncorked and decanted allowing them to "breathe."

Truth: To breathe or not breathe? While it is better to allow a young tannic Red to breathe in a glass or decanter to soften the tannins, an old Red reaches a stage in its life where it should be enjoyed soon after opening. Allow an old Red to breathe for a short time to dissipate any off odors. Most white wines can be served, ideally, 10-15 minutes after opening.

Myth 3: When age worthy wines peak, they must be consumed almost immediately.

Truth: Most great wines reach a plateau period rather than a peak. Great Bordeaux's may have as much as a 10-year plateau before fading.

Myth 4: Wine color does not change with aging.

Truth: As red wines age they get lighter in color while whites get darker.

The Cork: A Mystery on Its Own

Cork Presentation. The ritual of the presentation of the cork has a rich and fascinating history dating back to the late 1800's. A phylloxera (root louse) devastation to the vineyards severely limited the supply of great wines. Restaurateurs would remove labels on inferior wines and replace them with labels from superior wines. This made it necessary for patrons to protect themselves by checking the branding on the cork to ensure that what they ordered was, in fact, what they were served.

When presented with a cork today, feel it to check for its integrity, read and match the branding on the cork to the bottle and set it aside. There is little to be learned from the cork. The proof is in the wine.

"Corked" wines. If you've ever had a wine that smelled or tasted of mold, you've experienced a wine that may have been "corked." Today, between five and eight percent of wines are tainted with Trichloroanisole (TCA). This substance, found naturally in plants and trees, is imparted to the wine through the cork. Corked wines are a major concern for winemakers as it destroys millions of cases per year and puts reputations at stake. Amazing as it may seem twist-off caps may offer a better alternative and many great wineries in California, Australia and New Zealand are pioneering the trend.

Common Tasting Terms

Terminology	Description
Acidity	A critical element of wine that is responsible for preserving the wines freshness. Excess acidity results in an overly tart and sour wine.
Balance	A desired trait where tannin, fruit and acidity are in total harmony. Wines with good balance tend to age gracefully.
Body	The weight and presence of wine in the mouth provided by the alcohol and tannin level. Full-bodied wines tend to have this strong concentration.
Bouquet	The blending of a wine's aroma within the bottle over a period of time, caused by volatile acidity.
Complex	A subjective term often used in tasting. A wine is said to be complex if it offers a variety of flavors and scents that continue to evolve as it develops.
Flabby	A wine that lacks structure, or is heavy to the taste, lacks acidity.
Full-Bodied	Wine high in alcohol and extract, generally speaking, fills the mouth, powerful.
Lean	Generally describes wines that are slim, lacking of generosity or thin.
Oaky	A desirable flavor imparted to wine if done in moderation. Most wines are aged in oak barrels one to three years, thereby receiving this toasty oak characteristic. However, if a weak wine is left in contact too long with an oak barrel it will tend to be overpowered with an oaky taste.
Tannin	Tannins are extracted from the grape skins and stems and are necessary for a well-balanced red wine. Tannins are easily identified in wine tasting as the drying sensation over the gums. Tannins generally fade as a wine ages.

IDEAL WINE STORAGE CONSIDERATIONS

Temperature: The most important element about storage temperature is stability. If wine is kept in a stable environment between 40°F (7°C) and 65°F (21°C), it will remain sound. A small 1-2 degree temperature fluctuation within a stable environment is acceptable. Larger temperature fluctuations can affect the corks ability to seal, allowing the wine to "leak" from the bottle.

Humidity: The traditional view on humidity maintains that wines should be stored on their sides in 50% - 80% relative humidity to ensure cork moisture and proper fit in the bottle. Contemporary wisdom suggests that the cork surface is too small to be impacted by humidity. Further the cork is sealed with a metal or wax capsule making humidity penetration impossible. The concept of a humid storage environment was derived from the necessity of wineries to maintain moisture in their cellars to keep wooden barrel staves swollen, preventing wine evaporation and product loss. In fact, vineyards estimate as much as a 10% product loss per year due to evaporation while wine is aging in the wooden barrels. Humidity, however, was not intended for the modern home cellar where wine is stored in glass bottles with sealed corks.

Light: UV rays are not only harmful to people, they are damaging to wines - especially those in clear bottles. Since oxygen molecules in wine absorb UV rays, wine should never be stored in direct light for long periods of time.

Vibration: Provided that sediment is left undistributed and particles are not suspended, vibration in a storage environment is not an issue. Wines can become flat or tired when voids and vacuums are created inside the wine bottle. In order to create voids and vacuums within a liquid, aggressive motion or shaking of the wine bottle would have to occur.

The Right Temperature for Wine

Temperature	Wines
Approximately 60°F (15°C)	Red
50°F - 55°F (10°C -12°C)	White
Approximately 45°F (7°C)	Sparkling

Wine Captain® Models - A Touch of Elegance

In 1985 U-Line was the first North American appliance manufacturer to develop a residential wine storage unit, the Wine Captain®. Each U-Line Wine Captain® model is designed to impress and inspire anyone with an interest in wine by providing cellar conditions in stylish, undercounter units. U-Line Wine Captain® models offer stable storage temperatures, a 50% internal relative humidity and protection from UV light rays. U-Line has the largest product offering available, making storing, presenting, and sharing your wine effortless and elegant.

Recommended Wine Storage

Specially designed horizontal wine racks properly position the bottles so the wine remains in contact with the cork, which ensures the cork does not become dry.

Larger diameter bottles may be stored on the shaded racks, illustrated below.

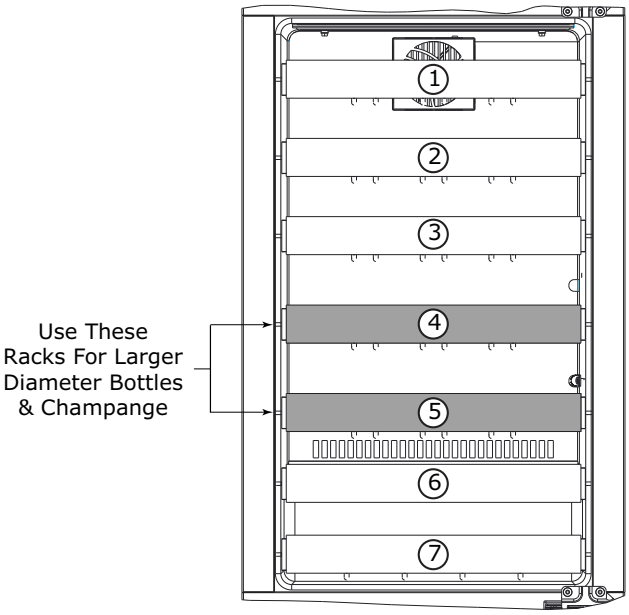

NOTE: After stocking, allow unit to stabilize product temperatures for 24 hours.

Cleaning

EXTERIOR CLEANING

Stainless Models

Stainless door panels, handles and frames can discolor when exposed to chlorine gas, pool chemicals, saltwater or cleaners with bleach.

Keep your stainless unit looking new by cleaning with a good quality all-in-one stainless steel cleaner and polish monthly. For best results use Claire® Stainless Steel Polish and Cleaner. Comparable products are acceptable. Frequent cleaning will remove surface contamination that could lead to rust. Some installations may require cleaning weekly.

Do not clean with steel wool pads.

Do not use stainless steel cleaners or polishes on any glass surfaces.

Clean any glass surfaces with a non-chlorine glass cleaner.

Do not use cleaners not specifically intended for stainless steel on stainless surfaces (this includes glass, tile and counter cleaners).

If any surface discoloring or rusting appears, clean it quickly with Bon-Ami® or Barkeepers Friend Cleanser® and a nonabrasive cloth. Always clean with the grain. Always finish with Claire® Stainless Steel Polish and Cleaner or comparable product to prevent further problems.

Using abrasive pads such as ScotchBrite™ will cause the graining in the stainless steel to become blurred.

Rust not cleaned up promptly can penetrate the surface of the stainless steel and complete removal of the rust may not be possible.

Integrated Models

To clean integrated panels, use household cleaner per the cabinet manufacturer's recommendations.

INTERIOR CLEANING

Disconnect power to the unit.

Clean the interior and all removed components using a mild nonabrasive detergent and warm water solution applied with a soft sponge or non-abrasive cloth.

Rinse the interior using a soft sponge and clean water.

Do not use any solvent-based or abrasive cleaners. These types of cleaners may transfer taste to the interior products and damage or discolor the interior.

DEFROSTING

Under normal conditions this unit does not require manual defrosting. Minor frost on the rear wall or visible through the evaporator plate vents is normal and will melt during each off cycle.

If there is excessive build-up of 1/4" (6 mm) or more, manually defrost the unit.

Ensure the door is closing and sealing properly.

High ambient temperature and excessive humidity can also produce frost.

⚠ CAUTION

DO NOT use an ice pick or other sharp instrument to help speed up defrosting. These instruments can puncture the inner lining or damage the cooling unit. DO NOT use any type of heater to defrost. Using a heater to speed up defrosting can cause personal injury and damage to the inner lining.

NOTICE

The drain pan was not designed to capture the water created when manually defrosting. To prevent water from overflowing the drain pan, and possibly damaging water sensitive flooring, the unit must be removed from cabinetry.

To defrost:

1. Disconnect power to the unit.
2. Remove all products from the interior.
3. Prop the door in an open position (2 in. [50 mm] minimum).
4. Allow the frost to melt naturally.
5. After the frost melts completely clean the interior and all removed components. (See INTERIOR CLEANING).
6. When the interior is dry, reconnect power and turn unit on.

Cleaning Condenser

INTERVAL - EVERY SIX MONTHS

To maintain operational efficiency, keep the front grille (plinth strip/base fascia) free of dust and lint, and clean the condenser when necessary. Depending on environmental conditions, more or less frequent cleaning may be necessary.

⚠ WARNING

Disconnect electric current to the unit before cleaning the condenser.

NOTICE

DO NOT use any type of cleaner on the condenser unit. Condenser may be cleaned using a vacuum, soft brush or compressed air.

1. Remove the grille (plinth strip/base fascia). (See GRILLE-PLINTH INSTALLATION).

2. Clean the condenser coil using a soft brush or vacuum cleaner.

3. Install the grille (plinth strip/base fascia).

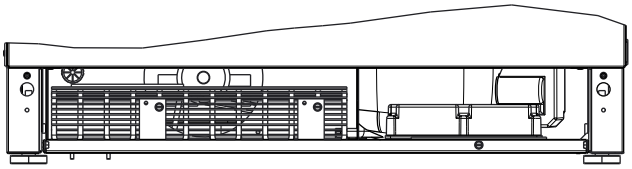

Extended Non-Use

VACATION/HOLIDAY, PROLONGED SHUTDOWN

The following steps are recommended for periods of extended non-use:

1. Remove all consumable content from the unit.
2. Disconnect the power cord from its outlet/socket and leave it disconnected until the unit is returned to service.
3. If ice is on the evaporator, allow ice to thaw naturally.
4. Clean and dry the interior of the unit. Ensure all water has been removed from the unit.
5. The door must remain open to prevent formation of mold and mildew. Open door a minimum of 2" (50 mm) to provide the necessary ventilation.

WINTERIZATION

If the unit will be exposed to temperatures of 40°F (5°C) or less, the steps above must be followed.

For questions regarding winterization, please call U-Line at +1.800.779.2547.

⚠ CAUTION

Damage caused by freezing temperatures is not covered by the warranty.

Troubleshooting

BEFORE CALLING FOR SERVICE

If you think your U-Line product is malfunctioning, read the CONTROL OPERATION section to clearly understand the function of the control.

If the problem persists, read the NORMAL OPERATING SOUNDS and TROUBLESHOOTING GUIDE sections below to help you quickly identify common problems and possible causes and remedies. Most often, this will resolve the problem without the need to call for service.

IF SERVICE IS REQUIRED

If you do not understand a troubleshooting remedy, or your product needs service, contact U-Line Corporation directly at +1.800.779.2547.

When you call, you will need your product Model and Serial Numbers. This information appears on the Model and Serial number plate located on the upper right or rear wall of the interior of your product.

NORMAL OPERATING SOUNDS

All models incorporate rigid foam insulated cabinets to provide high thermal efficiency and maximum sound reduction for its internal working components. Despite this technology, your model may make sounds that are unfamiliar.

Normal operating sounds may be more noticeable because of the unit's environment. Hard surfaces such as cabinets, wood, vinyl or tiled floors and paneled walls have a tendency to reflect normal appliance operating noises.

Listed below are common refrigeration components with a brief description of the normal operating sounds they make. NOTE: Your product may not contain all the components listed.

- Compressor: The compressor makes a hum or pulsing sound that may be heard when it operates.
- Evaporator: Refrigerant flowing through an evaporator may sound like boiling liquid.
- Condenser Fan: Air moving through a condenser may be heard.
- Automatic Defrost Drain Pan: Water may be heard dripping or running into the drain pan when the unit is in the defrost cycle.

TROUBLESHOOTING GUIDE

⚠ DANGER

ELECTROCUTION HAZARD. Never attempt to repair or perform maintenance on the unit before disconnecting the main electrical power.

Troubleshooting - What to check when problems occur:

Problem	Possible Cause and Remedy
Digital Display and Light Do Not Work.	Ensure power is connected to the unit. If the unit is cooling, it may be in Sabbath mode.
Interior Light Does Not Illuminate.	The light bulb may be defective. If the unit is cooling, it may be in Sabbath mode.
Light Remains on When Door Is Closed.	For glass door models, press the light icon and close the door. Check reed switch.
Unit Develops Frost on Internal Surfaces.	Frost on the rear wall is normal and will melt during each off cycle. If there is excessive build-up of 1/4" or more, manually defrost the unit. Ensure the door is closing and sealing properly. High ambient temperature and excessive humidity can also produce frost.
Unit Develops Condensation on External Surfaces.	The unit is exposed to excessive humidity. Moisture will dissipate as humidity levels decrease.
Digital Display Functions, But Unit Does Not Cool.	Ensure the unit is not in "Showroom Mode." Momentarily unplug or interrupt power supply to the unit.
Digital Display Shows ER or E Followed by a Number.	E3 indicates the door may be opened too long. Ensure the door is closing properly. For other error codes contact U-Line Customer Service.

Problem	Possible Cause and Remedy
Digital Display Shows 1-16 or 99	A factory test mode may be enabled. Adjust the temperature to 99 and press the LIGHT icon.
Product Is Freezing.	Because product in contact with the rear wall may freeze, ensure no product is touching the rear wall. Adjust the temperature to a warmer set point.
Product Is Not Cold Enough.	Air temperature does not indicate product temperature. See CHECKING PRODUCT TEMPERATURE below. Adjust the temperature to a cooler set point. Ensure unit is not located in excessive ambient temperatures or in direct sunlight. Ensure the door is closing and sealing properly. Ensure the interior light has not remained on too long. Ensure nothing is blocking the front grille, found at the bottom of the unit. Ensure the condenser coil is clean and free of any dirt or lint build-up.

CHECKING PRODUCT TEMPERATURE

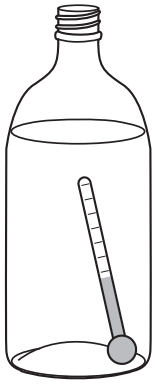

To check the actual product temperature in the unit:

1. Partially fill a plastic (nonbreakable) bottle with water.
2. Insert an accurate thermometer.
3. Tighten the bottle cap securely.
4. Place the bottle in the desired area for 24 hours.
5. Avoid opening the unit during the testing period.
6. After 24 hours, check the temperature of the water. If required, adjust the temperature control in a small increment (see CONTROL OPERATION).

Causes which affect the internal temperatures of the cabinet include:

- Temperature setting.
- Ambient temperature where installed.
- Installation in direct sunlight or near a heat source.
- The number of door openings and the time the door is open.
- The time the internal light is illuminated. (This mainly affects product on the top rack or shelf.)

Wire Diagram

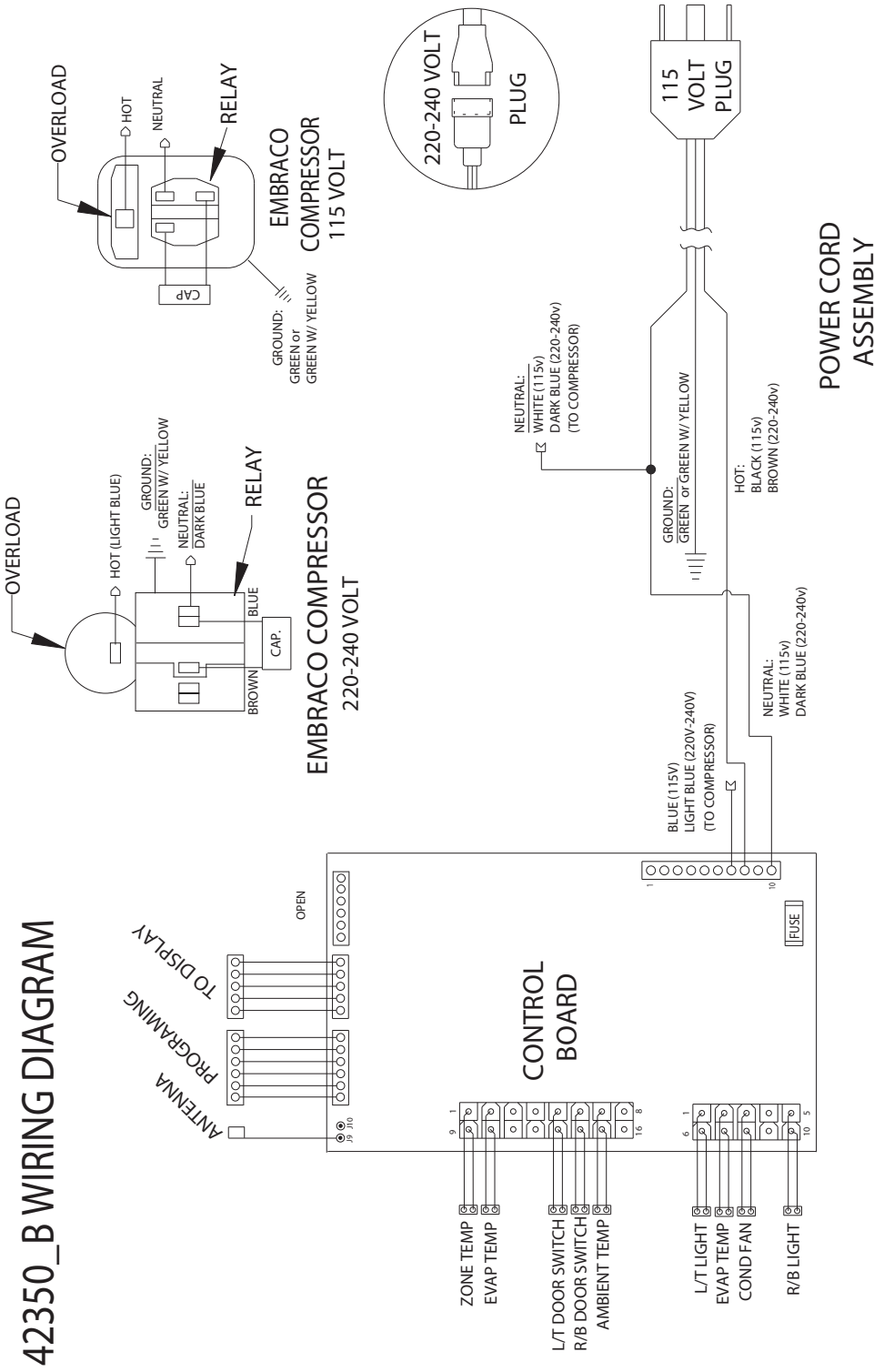

Product Liability

Field service technicians are authorized to make an initial assessment in the event of reported damages. If there are any questions about the process involved, the technician should call U-Line for further explanation.

While inspecting for defects or installation issues, photos should be taken to document any damages or issues found.

During the assessment, if the service technician is able to find the source of the damage and it can be resolved by replacement of a part, the servicer is authorized to replace the part in question. The part that caused the damage must be returned to U-Line in its entirety. The part must be clearly labeled with the serial number of the unit it was removed from, the date, and the servicer who removed the part.

If the service technician determines the damage is the result of installation issues (water connection/drain, etc.), the consumer would be notified and the issues shall be resolved at the direction of the consumer.

If damage is evident and the service technician is unable to find the source, U-Line must be contacted at 1-800-799-2547 for further direction

8900 N. 55th Street • Milwaukee, WI 53223
T: +1.414.354.0300 • F: +1.414.354.354.5696
Website: www.u-line.com

Right product. Right place.
Right temperature Since 1962.

Warranty Claims

The following information defines the parameters for filing a warranty claim:

- Valid serial number needed
- Valid model number needed
- Narda (or equivalent) form or submitted online at www.u-line.com
- 60 day submittal deadline from date of completed service
- Only one repair or unit per warranty claim
- Refrigerant should be labeled and included on the labor submittal
- Door and water level adjustments are covered 30 days from install date.

Serial Number Requirements:

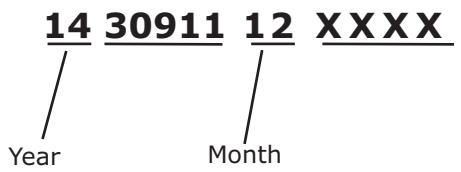

A typical serial number is shown above. The first two digits of the first segment, 14, represents the production year. The number between the dashes, 12, represents the production month. In most cases, warranty status can be verified by the production date information within the serial number.

- Alternatively, a Proof of Purchase (or equivalent) may submitted with the warranty claim to document warranty status. We also accept the following information to verify warranty status:
- New Construction Occupancy Documents
- Closing Paperwork
- Final Billing – Remodel

Noting all of the following on the warranty claim will be considered proof of purchase, hard copy will not be required:

- Name of the selling Dealer
- Date of purchase/installation
- Order or Invoice number (if available)
- Description of document reviewed (i.e. store receipt, closing paperwork, etc)

Parts and labor claims are paid separately. Indicate part numbers and description for parts used in the warranty repair. Include the purchase invoice and name of the parts supplier used to procure the parts.

Parts

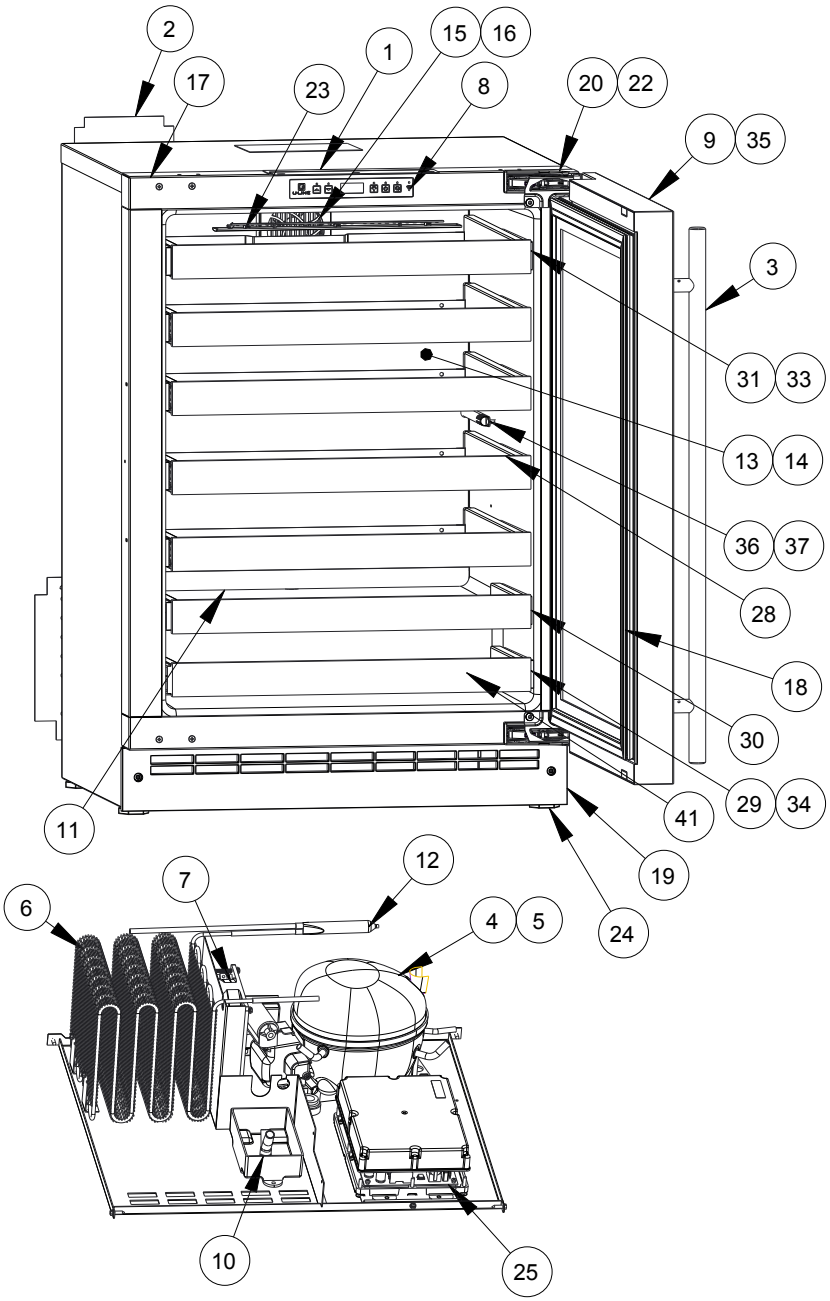

U-2224WCS-00A		
Item	Description	U-Line P/N
1	Anti tip brackets w/screws	80-54012-00
2	Back panel	80-54086-00
3	Commercial door Handle	80-54214-00
4	Compressor electricals only	80-54149-00
5	Compressor w/electricals	80-54193-00
6	Condenser assembly	80-54043-00
7	Condenser fan w/screws	80-54014-00
8	Display module	80-54007-00
9	Door assembly w/hinges	80-54185-00
10	Drain pan w/double sided tape	80-54217-00
11	Drain trough assembly	80-54399-00
12	Drier	80-54055-00
13	Evaporator assembly	80-54057-00
14	Evaporator cover	80-54042-00
15	Evaporator fan	80-54321-00
16	Evap fan w/cover and screws	80-54151-00
17	Frame assembly	80-54820-00
18	Gasket, door, injection molded	80-54039-00
19	Grille w/ screws	80-54040-00
20	Hinge covers (2 pcs)	80-54001-00
21	Hinge mounting hole covers(2)	80-54024-00
22	Hinges (2) w/screws and covers	80-54013-00
23	LED light strip and cover assy	80-54000-00
24	Leg Levelers (4)	80-54019-00
25	Main board (no case or wires)	80-54008-00
26	Packaging	80-54159-00
27	Power cord	80-54171-00
28	Rack assembly	80-54010-00
29	Rack assembly bottom	80-54091-00
30	Rack Assembly, lower	80-54817-00
31	Rack Assembly, middle	80-54818-00
32	Reed switch	80-54134-00
33	Slide assembly, long	80-54047-00
34	Slide assembly, short	80-54048-00
35	Stainless Wrap w/rivets	80-54821-00
36	Thermistor (1 pc)	80-54006-00
37	Thermistor cover and pin	80-54023-00
38	Tool, leg leveler	80-54794-00
39	WIFI antenna	80-54804-00
40	Wire Harness, board	80-54251-00
41	Wood fronts w/screws	80-54498-00

Ordering Replacement Parts

If you have a purchasing account, please utilize our service website to order parts.

Orders may also be placed by Fax or phone. See our contact information below:

www.U-LineService.com (with service login)
FAX Number: +1.414.354.5696
Phone Number: +1.800.779.2547

NOTICE

Use only genuine U-Line replacement parts. The use of non-U-Line parts can reduce speed of ice production, cause water to overflow from ice maker mold, damage the unit, and void the warranty.

Warranty parts will be shipped at no charge after U-Line confirms warranty status. Please provide the model, serial number, part number and part description. Some parts will require color or voltage information.

If U-Line requires the return of original parts, we will inform you when the parts order is taken. This requirement will be noted on your packing list. A prepaid shipping label will be included with the replacement part. Please enclose a copy of the parts packing list and any labor claims with your return. Please be sure the model and serial numbers are legible on the paperwork. Tag the part with the reported defect.

When ordering a non-warranty part, you will need an open account and tax exemption on file at U-Line. Another option would be to visit www.u-line.com to locate an authorized parts distributor in your area.

R-600A Specifications

For R-600a refrigerant service tips and more videos, go to: www.u-line.com/videos.

WARNING

Flammability warnings for a pure-iso-butane refrigerant.

Technician must observe all federal, state and local laws regarding refrigerants.

Gloves and Eye Protection must be used.

R-600a is considered non-toxic, but is flammable when mixed with air.

Keep a dry powder type fire extinguisher in the work area.

R-600a is heavier than air, do not allow any leakage/migration to low areas such as basements and stairs.

Never use a torch on a fully charged refrigeration system.

Never substitute U-Line OEM replacement parts or methods of construction.

R-600a must be stored and transported in approved containers.

⚠ WARNING

Only skilled and well trained service technicians permitted to service R-600a equipped products.

All tools and equipment must be approved for use with R-600a refrigerant.

Local, state and federal laws, standards must be observed along with proper certification and licensing.

Ventilation is required during servicing.

No conversions to R-600a from any other refrigerants. OEM R-600a equipped unit only.

Service area must be free of ignition sources.

No smoking is allowed in the service area.

All replacement electrical components must be OEM and installed properly (sealed and covered).

If the evaporator is cold prior to service, it must be thawed prior to service.

When using a vacuum pump, start pump before opening refrigeration system.

Vacuum pump and recovery equipment should be at least 10 feet from the work area.

It is recommended that a simple LPG gas detector is on site during service.

Ensure that all R-600a is removed from the system prior to brazing any part of the sealed system.

Only a clean, dry leak free system should be charged with R-600a.

R-600A SPECIFICATIONS/LABELING

R-600a equipped products are labeled (both the unit and the compressor).

R-600a is colorless and odorless.

R-600a is considered non-toxic, but is flammable when mixed with air.

Do not remove or alter any R-600a labeling on the product.

Use only a refrigerant grade R-600a from a properly labeled container.

RECOVERING/RECLAIMING R-600A

(R-600a has been exempted from recovery/reclaiming requirements by the US EPA)

Recovery/Reclaiming equipment must be approved for use with R-600a.

Ensure the evaporator is at room temperature prior to recovery/reclaiming R-600a.

Use a common piercing pliers or piercing valve to remove R-600a from the compressor process tube. (Note: Piercing devices must not be left on the system and must be replaced with a Schrader type valve.)

Evacuate/reclaim via the piecing pliers to ensure the system is empty of R-600a before any system work is performed.

The recovery cylinder must be evacuated (no air inside) prior to accepting R-600a.

The recovery cylinder must not be filled more than 45% safe fill level and refrigerants must not be mixed.

The recovery cylinder must be clearly marked with R-600a and Flammable Warning labels.

Ensure proper ventilation during recovery/reclaiming of R-600a.

Start vacuum pump/recovery pump prior to piercing the compressor process tube.

Follow recovery/reclaim OEM instructions for the specific equipment used.

SYSTEM REPAIR

Ensure no residual R-600a refrigerant is left within the system prior to repair (simple venting is not sufficient).

Evacuate and charge with dry nitrogen for leak checks.

Repair leaks or replace system parts as required.

When re-brazing, the system must be purged with dry nitrogen and at least one access point open to the atmosphere.

When re-brazing, proper ventilation is required along with constant monitoring for the presence of R600a refrigerant.

The filter dryer must be replaced any time the sealed system is serviced.

No system should be open to the atmosphere for longer than 15 minutes to avoid moisture migration into the system components.

LEAK DETECTION

After removal of the R-600a, the unit can be charged with dry nitrogen or helium.

Electronic leak detection or soap solution can be used to check for nitrogen/helium leaks.

Never use a halide torch or lighted match to check the system for leaks at any time.

The high side of the refrigeration system (compressor discharge to outlet of drier) must be leak tested with the compressor running.

The low side of the refrigeration system (evaporator, compressor and suction line) must be leak tested with the compressor off (equalized pressure).

RECHARGING

No air is ever to be allowed inside the refrigeration system (R-600a refrigerant or dry nitrogen only).

Never use a torch on a fully charged refrigeration system.

Install a Schrader Type access port on the compressor process stub.

Evacuate the system to 100 microns prior to charging.

Weigh in the R-600a charge using a refrigerant scale. (run compressor an extra two minutes to clear the charging hoses).

Seal the Schrader Type access port, a proper cap and seal must be used to close the system.

SUMMARY

Safely handling R-600a requires proper procedures and training.

R-600a approved service tools must be used.

R-600a labeling must not be removed or altered.

Proper ventilation during service is required.

Never apply a torch to a charged R-600a refrigeration system.

Use OEM replacement service parts and do not alter the construction of the unit.

System Diagnosis Guide

REFRIGERATION SYSTEM DIAGNOSIS GUIDE

System Condition	Suction Pressure	Suction Line	Compressor Discharge	Condenser	Capillary Tube	Evaporator	Wattage
Normal	Normal	Slightly below room temperature	Very hot	Very hot	Warm	Cold	Normal
Overcharge	Higher than normal	Very cold may frost heavily	Slightly warm to hot	Hot to warm	Cool	Cold	Higher than normal
Undercharge	Lower than normal	Warm-near room temperature	Hot	Warm	Warm	Extremely cold near inlet - Outlet below room temperature	Lower than normal
Partial Restriction	Somewhat lower than normal vacuum	Warm - near room temperature	Very hot	Top passes warm - Lower passes cool (near room temperature) due to liquid	Room temperature (cool) or colder	Extremely cold near inlet - Outlet below room temperature backing up	Lower than normal
Complete Restriction	In deep vacuum	Room temperature (cool)	Room temperature (cool)	Room temperature (cool)	Room temperature (cool)	No refrigeration	Lower than normal
No Gas	0 PSIG to 25"	Room temperature (cool)	Cool to hot	Room temperature (cool)	Room temperature (cool)	No refrigeration	Lower than normal

Compressor Specifications

DANGER

Electrocution can cause death or serious injury. Burns from hot or cold surfaces can cause serious injury. Take precautions when servicing this unit.

Disconnect the power source.

Do not stand in standing water when working around electrical appliances.

Make sure the surfaces you touch are not hot or frozen.

Do not touch a bare circuit board unless you are wearing an anti-static wrist strap that is grounded to an electrical ground or grounded water pipe.

Handle circuit boards carefully and avoid touching components.

To measure the start winding resistance, measure across the C and S pins.

To measure the run winding resistance, measure across the C and R pins.

Also check S to R and you should get the sum of the run and start windings.

To ensure the windings are not shorted, check the S and R to ground.

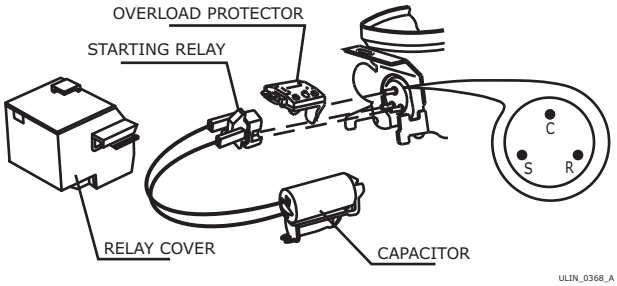

	EMX20CLC
Refrigerant	R600a
Voltage	115 - 127 VAC
Frequency	60 Hz
Run Cap	12μF/165 VAC
Start Winding	6.7 Ohm at 77°F
Run Winding	12.6 Ohm at 77°F
LRA	3.7 A
FLA	0.5 A
Starting Device	8EA14C
Overload	4TM142RFBYY-53

* All resistance readings are ±10%

Troubleshooting - Extended

⚠ CAUTION

Never attempt to repair or perform maintenance on the unit until the main electrical power has been disconnected from the unit.

SPECIFIC ERRORS AND ISSUES

The technically advanced diagnostic capabilities of the electronic controls utilized on the 1200 and 2200 series units allows for easy and thorough troubleshooting.

Navigation of the control is the key and is explained in the CONTROL OPERATION section of the manual, along with control button layout, control function descriptions, a service mode menu and service menu selection explanations.

Verification of temperature and thermistor performance can be identified by directly viewing thermistor readings in the service mode.

Component failure issues can be identified through service mode menu #19, “Component Testing.” Individual components can be switched on and off to check for both proper function of a specific component and also delivery of supply voltage to the components through the relays and DC outputs located on the relay/power board.

Included in this section are some diagnostic tips and of course, if additional help is required please contact the U-Line Corp, “Customer Care Facility” at +1.800.779.2547 for assistance.

NORMAL OPERATING SOUNDS

All models incorporate rigid foam insulated cabinets to provide high thermal efficiency and maximum sound reduction for its internal working components. Despite this technology, your model may make sounds that are unfamiliar.

Normal operating sounds may be more noticeable because of the unit’s environment. Hard surfaces such as cabinets, wood, vinyl or tiled floors and paneled walls have a tendency to reflect normal appliance operating noises.

Listed below are common refrigeration components with a brief description of the normal operating sounds they make. NOTE: Your product may not contain all the components listed.

- Compressor: The compressor makes a hum or pulsing sound that may be heard when it operates.
- Evaporator: Refrigerant flowing through an evaporator may sound like boiling liquid.
- Condenser Fan: Air moving through a condenser may be heard.
- Automatic Defrost Drain Pan: Water may be heard dripping or running into the drain pan when the unit is in the defrost cycle.

Solenoid Valves: An occasional clicking sound may be heard as solenoid valves are operated.

TROUBLESHOOTING GUIDE

Concern	Potential Causes	Suggested Remedy
Not Cooling	Compressor overheating	Verify proper air flow through condenser. Is condenser clean?
		Confirm condenser fan operation.
		Confirm proper compressor operating voltage. Use #19, Component Testing in Service Mode.
	Compressor not operating	Confirm proper compressor operating voltage. Use #19, Component Testing in Service Mode.
		Test overload and relay, replace as needed.
	Compressor operating - no cooling	Refer to System Diagnosis Guide.
	Evaporator fan not operating	Use #19, Component Testing in Service Mode.
Frozen Product	Control set too cold	Adjust Set Point Temp accordingly.
	Review logged error codes	Refer to #14, Error Log in Service Mode.
	Thermistor failure	Check Error Log in Service Mode, OHM thermistor.
Frost Buildup Inside Unit	Door Ajar or Restricted from Closing	Check door clearance to adjoining cabinetry. Check distribution of product in unit.
	Evaporator fan not operating	Use Relay Toggle, Component Testing in Service Mode.
	Thermistor failure	Check Error Log.
Display Not Working	Unit placed in Sabbath mode?	Press and hold for 5 seconds to check.
	Display unplugged	Verify that both ends of the display wiring are firmly connected.
	Display wiring broken or damaged	Perform continuity test of wiring and replace as needed.
Internal Lights Not Working	Control Setting	Unit set to Sabbath Mode. Press and hold for 5 seconds to check.
	Door switch misaligned or defective	Check the function of reed switch and door magnet adjustment.
Noisy	Refrigeration tubing touching cabinet	Carefully reposition tubing.
	Fan blade obstruction (wiring, foam insulation, packaging material)	Remove obstruction.

MAIN CONTROL

The main control board is very robust and is rarely the cause of system issues. It is important to fully diagnose the board for any suspected failures before attempting to remove the board for replacement or service. Follow the guidelines below to fully test and diagnose the main control.

Power Fault

If the unit does not (or seems to not) power on, follow the flow chart below to help diagnose the issue. Before beginning it is important to first verify the unit is not simply set to sabbath mode.

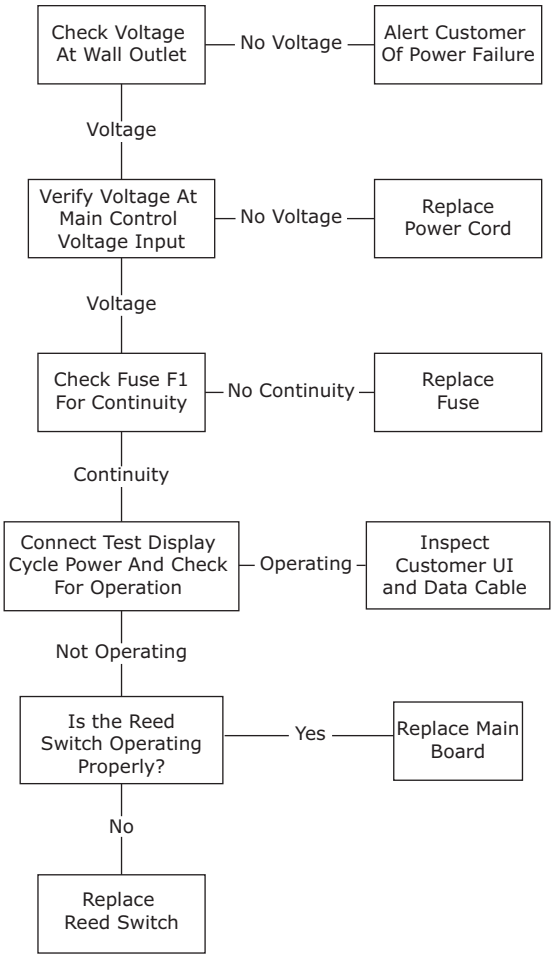

Testing The Main Control

If the main control is suspected of being faulty, the following procedure should be performed to verify main control for functionality.

Relay & DC Outputs

One of the primary functions of the main control is to operate the multiple relay and DC outputs during each cycle. Verify proper operation of these relays using the following procedure.

1. Enter “Relay Toggle” through the service menu.

NOTICE

Frequently toggling the compressor relay could force the compressor into overload. The compressor will automatically deactivate during an overload and will remain deactivated until the overload switch cools. This could take some time. It is important to allow the compressor at least 5 minutes off time between relay cycles.

2. Toggle the relay. Its related component should activate / deactivate with the switching of the relay. If it does not, test component.

Other Suspected Main Control Faults

If other components have been ruled out as being faulty but the unit continues to have operating issues, it is most likely due to a configuration error. Configuration errors can be cleared by restoring the unit to its factory default setting. Factory defaults may be restored through the service menu.

⚠ CAUTION

Precautions must be taken while working with live electrical equipment. Be sure to follow proper safety procedures while performing tests on live systems.

REED SWITCH

A reed switch is used to monitor door state. When the door is closed magnetic force pulls the reed to its contact and closes the circuit which turns the light and display off. When the door is open the reed pulls away from the contact and opens the circuit. If the door is left open for longer than 5 minutes, the switch will trigger an error code and set an audible warning.

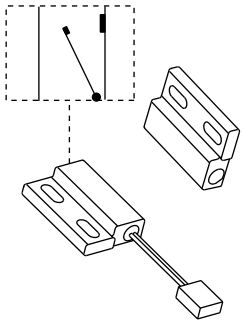

Magnet Away From Switch
(Door Open)
(Switch Open)

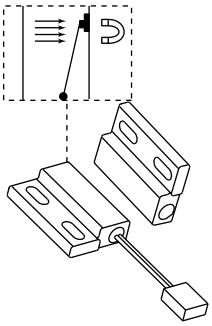

Magnet Close To Switch
(Door Closed)
(Switch Closed)

Control Operation - Service

UI BUTTON LAYOUT

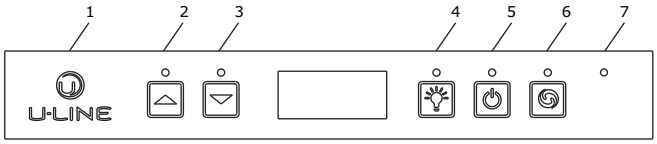

1. **Hidden Button**
   -Accesses Service Menu
   -No LED directly above. All LEDs turn on with button activation except #7.

2. **Up Button**
   -Increases temperature
   -Navigates through service menu
   -LED activated with button activation.

3. **Down Button**
   -Decreases temperature
   -Navigates through service menu
   -LED activated with button activation

4. **Light Button**
   -Activates light for 3 hours on select models
   -Used to select items in service menu
   -LED activated with button activation

5. **Power Button**
   -Turns unit off/on
   -LED activated with button activation (only turning unit off)

6. **Clean Button**
   -Activates Clean Cycle on CLR models
   -LED activated with button activation

7. **LED**
   -No button

CONTROL FUNCTION QUICK GUIDE

FUNCTION	COMMAND	DISPLAY/OPTIONS
ON/OFF	Press ⏻ and release	Unit will immediately turn ON or OFF
Toggle lights	Press 💡 and release to leave interior light on for 3 hours	Glass door wine captains and beverage centers only.
Adjust refrigerator temperature	Push ⌃ or ⌄ and release	When the “F” or “C” in the display is flashing, push ⌃ or ⌄ to adjust the set point temperature.
View temperature in unit	Push ⌃ and ⌄ and release the together	The display will flash and then toggle from set point to temperature in unit.
Toggle between F/C	Hold the ⌃ and ⌄ for five seconds	The display will change units.

DOOR ALERT NOTIFICATION

When the door is left open for more than 5 minutes:

- An audible tone will sound for several seconds every minute.
- “dr” will appear in display.

Close door to silence alert and reset.

VIEWING ACTUAL TEMPERATURE

In viewing temperature in these modes any offsets are taken into account. This means that if you place a thermistor in a known temperature, let’s say ice water, it may not read the 32°F that you would assume. If the control offset was preset at -3°F while you placed the thermistor in an icebath, the actual thermistor reading when viewing actual temperature would read 35°F. In the unit this would cause the cabinet to push itself 3° cooler. To view pure thermistor readings you must go into the service menu and choose the correct option.

To view the thermistor temperature, push and release the up and down keys. The display will show the corrected refrigerator temperature.

SHOWROOM MODE

This mode is designed to show units in a display environment. When in this mode the only functions will be the control and cabinet lights. The compressor, fans, etc. will not operate. To enter/exit this mode hold the light key and the power key for 5 seconds. The display will flash once and beep and the degree symbol will begin to flash.

When the degree symbol is flashing the unit will allow the use of the control for demonstrations. The unit can be left in this mode indefinitely.

SERVICE MODE

This mode has options available for service diagnostics. To enter the mode hold the hidden key for 10 seconds. The display will show “0.” When in this mode use the up and down arrows to select the desired option. The LIGHT key is the ENTER key and will initiate the function. If changing a setting, you must press the LIGHT key again to retain the changed setting. To exit the service mode scroll to option “0” and press the LIGHT key. After five minutes of not touching any keys the mode will also exit automatically.

SERVICE MODE GUIDE

#	Service Mode Menu Item
1	View thermistor #1 (no offsets)
2	View thermistor #2 (no offsets)
3	View thermistor #3 (no offsets)
4	View thermistor #4 (no offsets)
5	Adjust thermistor #1 offset
6	Adjust thermistor #2 offset
7	Adjust thermistor #3 offset
8	Adjust thermistor #4 offset
9	View thermistor #2 set point no offsets
10	View thermistor #3 set point no offsets
11	View thermistor #4 set point no offsets
12	Adjust defrost interval 3 to 24 hours
13	Adjust defrost duration 0 to 99 minutes
14	View error log
15	Clear error log
16	Adjust thermistor #1 differential
17	Adjust evaporator fan delay in minutes (start of cooling cycle) 0 - 99 minutes
18	Adjust evaporator fan delay in minutes (after cooling cycle stops) 0 - 99 minutes
19	Individual component toggle
20	Model number indicator
21	Light all LED segments of display
22	View defrost cycles
23	View compressor run time
24	Activate defrost/harvest
25	Restore factory defaults
26	View software version - main board
27	View software version - user interface
28	Login period
29	Factory test mode
0	Exit service mode

NAVIGATE SERVICE MODE

Use up or down arrows to scroll through the menu.

Use the light bulb key to enter or exit menu. If values have been changed, they will be saved when exiting.

SERVICE MODE GUIDE

1. **THERMISTOR 1 — ZONE**
   This shows the pure thermistor reading with no offsets taken into account.
2. **THERMISTOR 2 — EVAPORATOR**
   This shows the pure thermistor reading with no offsets taken into account.
3. Does not apply to this model.
4. Does not apply to this model.
5. **THERMISTOR 1 — ZONE OFFSET**
   (DO NOT MAKE AN ADJUSTMENT TO THIS WITHOUT CONTACTING TECH LINE: 800-779-2547)

   This calibration is only to be used if actual temperature at thermistor #1 is off from set point.

   By adjusting the offset higher we can force the unit to drive the temperature down below the set point. (example: adjusting from 0 to +2 will drop the unit temperature 2 degrees)
6. **THERMISTOR 2 — EVAPORATOR OFFSET**
   (DO NOT MAKE AN ADJUSTMENT TO THIS WITHOUT CONTACTING TECH LINE: 800-779-2547)
7. **THERMISTOR 3 — AMBIENT OFFSET**
   Not adjustable.
8. Does not apply to this model.
9. **THERMISTOR 2 — SET POINT MINUS OFFSET**
   This shows the thermistor reading with offsets taken into account.
10. Does not apply to this model.
11. Does not apply to this model.
12. **ADJUST DEFROST INTERVAL — 3 TO 24 HOURS**
    This will adjust the interval between defrosts from 3 to 24 hours. Adjusting from the factory settings may cause undesired temperature in the refrigerator section.
13. **ADJUST DEFROST DURATION — 0 TO 99 MINUTES**
    The length of the defrost can be adjusted 0 to 99 minutes long. The other defrost parameters still apply. Lengthening a defrost may cause higher than normal temperatures in the refrigerator section.

14. **VIEW ERROR LOG**
A list of the errors in the order they occurred will scroll once on the display. All errors are logged in memory. Only door error is displayed on the display and has an audible signal.
E0: Door 1 (upper) open.
E1: Thermistor 1 open.
E2: Thermistor 2 open.
E3: Thermistor 3 open.
E4: Thermistor 4 open (Does not apply to this model).
E5: Thermistor 1 shorted.
E6: Thermistor 2 shorted.
E7: Thermistor 3 shorted.
E8: Thermistor 4 shorted (Does not apply to this model).
E9: Door 2 (lower) open.
P1: Pump Circuit open (Does not apply to this model).

15. **CLEAR ERROR LOG**
To clear errors, press and hold (5 seconds) when CLR is flashing.

16. **THERMISTOR — 1 DIFFERENTIAL**
This number should not be adjusted.

17. **EVAPORATOR FAN DELAY IN MINUTES — ON**
"Fan Delay On" is the amount of time in minutes the fan will be delayed from starting from the beginning of a cooling cycle. Adjustable 0-99 minutes.

18. **EVAPORATOR FAN DELAY IN MINUTES — OFF**
"Fan Delay Off" is the amount of time in minutes the fan will continue to run at the end of a cooling cycle. Adjustable 0-99 minutes.

19. **INDIVIDUAL COMPONENT TOGGLE**

Display #	Relay/Output
0	Exit
2	Relay 2
3	Relay 3
4	Relay 4
5	Relay 5
6	Relay 6
7	Relay 7
8	DC Output 1
9	DC Output 2
10	DC Output 3
11	DC Output 4
12	DC Output 5

SEE RELAY/OUTPUT CHART

20. **MODEL NUMBER INDICATOR**
Displays the two-digit model number of the specific unit. See model list table.

21. **LIGHT ALL LED SEGMENTS**
This will illuminate all the LEDs on the display to ensure they work properly.

22. **VIEW DEFROST CYCLES**
Displays the number of defrosts that have occurred in the past 24 hours.

23. **VIEW COMPRESSOR RUNTIME**
This will show the number of minutes the compressor has run in the prior cycle (or current cycle if the compressor was running when service mode was entered).

24. **ACTIVATE DEFROST/HARVEST**
Turns on the hot gas bypass valve allowing hot gas to circulate through the evaporator causing frost to melt.

25. **RESTORE FACTORY DEFAULTS**
Will restore all adjustable functions to their factory settings.

26. **SOFTWARE VERSION — MAIN BOARD**
Displays software version of the main control board.

27. **SOFTWARE VERSION — USER INTERFACE**
Displays software version of the user interface.

28. **LOG IN PERIOD**
Factory use only - do not adjust.

29. **FACTORY TEST MODE**
Should be 0.

0. **EXIT SERVICE MODE**

MODEL LIST

1000	MODEL INDICATOR		2000 (120V)	MODEL INDICATOR		2000 (230V)	MODEL INDICATOR
1215R	07		2218R	05		2245R	55
1215WC	12		2218RGL	04		2245DC	54
1224BEV	13		2218WC	06		2245WC	56
1224DWR	08		2224BEV	00		2260DC	50
1224R	14		2224R	02		2260R	52
1224RF	09		2224RGL	01		2260RDC	51
1224RSOD	10		2224WC	03		2260WC	53
1224WC	15		2224ZWC	59		2260ZWC	58
CLR1215	18		ADA24R	17		2260DWR	70
CO1224F	19						
1224FZR	11						

PROGRAMMING THE UNIT TO CORRECT MODEL NUMBER

1. Disconnect the unit from power source.
2. Push and hold the U-Line button.
3. While still holding the U-Line button, plug the unit into the appropriate power source.
4. When the flashing digits appear (3-5 seconds), use the up and down arrow buttons to select the appropriate model number*. or

*(See Above “Model List”)

5. Press the light bulb button once.
6. The display will blink, and then will appear as the programmed display.

Relay / Output Chart

Name	Relay 2	Relay 3	Relay 4	Relay 5	Relay 6	Relay 7	DC Output 1	DC Output 2	DC Output 3	DC Output 4	DC Output 5
1215R	N/A	N/A	N/A	N/A	N/A	Compressor	Light	Evaporator Fan	Condenser Fan	N/A	N/A
1215WC	N/A	N/A	N/A	N/A	N/A	Compressor	Light	Evaporator Fan	Condenser Fan	N/A	N/A
124BEV	N/A	N/A	N/A	N/A	N/A	Compressor	Light	Evaporator Fan	Condenser Fan	N/A	N/A
1224DWR	Mullion Heater	N/A	N/A	N/A	N/A	Compressor	Top Light	Evaporator Fan	Condenser Fan	N/A	Bottom Light
1224R	N/A	N/A	N/A	N/A	N/A	Compressor	Light	Evaporator Fan	Condenser Fan	N/A	N/A
1224RF	N/A	N/A	Pan Heater	Hot Gas Valve	N/A	Compressor	Light	Evaporator Fan	Condenser Fan	N/A	N/A
1224RSOD	N/A	N/A	N/A	N/A	N/A	Compressor	Light	Evaporator Fan	Condenser Fan	N/A	N/A
1224WC	N/A	N/A	N/A	N/A	N/A	Compressor	Light	Evaporator Fan	Condenser Fan	N/A	N/A
ADA24R	N/A	N/A	N/A	N/A	N/A	Compressor	Light	Evaporator Fan	Condenser Fan	N/A	N/A
CLR1215	N/A	Pump	Water Valve	Hot Gas Valve	Condenser Fan	Compressor	Light	N/A	N/A	N/A	N/A
CO1224F	Ice Maker 2	Ice Maker 1	Pan Heater	Hot Gas Valve	N/A	Compressor	Light	Evaporator Fan	Condenser Fan	N/A	N/A
2218R	N/A	N/A	N/A	N/A	N/A	Compressor	Light	Evaporator Fan	Condenser Fan	N/A	N/A
2218RGL	N/A	N/A	N/A	N/A	N/A	Compressor	Light	Evaporator Fan	Condenser Fan	N/A	N/A
2218WC	N/A	N/A	N/A	N/A	N/A	Compressor	Light	Evaporator Fan	Condenser Fan	N/A	N/A
2224BEV	N/A	N/A	N/A	N/A	N/A	Compressor	Light	Evaporator Fan	Condenser Fan	N/A	N/A
2224R	N/A	N/A	N/A	N/A	N/A	Compressor	Light	Evaporator Fan	Condenser Fan	N/A	N/A
2224RGL	N/A	N/A	N/A	N/A	N/A	Compressor	Light	Evaporator Fan	Condenser Fan	N/A	N/A
2224WC	N/A	N/A	N/A	N/A	N/A	Compressor	Light	Evaporator Fan	Condenser Fan	N/A	N/A
2224ZWC	N/A	N/A	vl2	vl1	N/A	Compressor	Top Light	N/A	Condenser Fan	N/A	Bottom Light
2245R	N/A	Hot Gas Valve	N/A	N/A	N/A	Compressor	Light	Evaporator Fan	Condenser Fan	N/A	N/A
2245RDC	N/A	Hot Gas Valve	N/A	N/A	N/A	Compressor	Light	Evaporator Fan	Condenser Fan	N/A	N/A
2245WC	N/A	Hot Gas Valve	N/A	N/A	N/A	Compressor	Light	Evaporator Fan	Condenser Fan	N/A	N/A
2260DC	N/A	N/A	N/A	N/A	N/A	Compressor	Light	Evaporator Fan	Condenser Fan	N/A	N/A
2260R	N/A	N/A	N/A	N/A	N/A	Compressor	Light	Evaporator Fan	Condenser Fan	N/A	N/A
2260RDC	N/A	N/A	N/A	N/A	N/A	Compressor	Light	Evaporator Fan	Condenser Fan	N/A	N/A
2260WC	N/A	N/A	N/A	N/A	N/A	Compressor	Light	Evaporator Fan	Condenser Fan	N/A	N/A
2260ZWC	N/A	N/A	vl2	vl1	N/A	Compressor	Top Light	N/A	Condenser Fan	N/A	Bottom Light
1224FZR	N/A	Defrost Heater	N/A	N/A	Condenser Fan	Compressor	Light	Evaporator Fan	N/A	N/A	N/A
2260DWR	Mullion Heater	N/A	N/A	N/A	N/A	Compressor	Top Light	Evaporator Fan	Condenser Fan	N/A	Bottom Light
2224DWR	Mullion Heater	N/A	N/A	N/A	N/A	Compressor	Top Light	Evaporator Fan	Condenser Fan	N/A	Bottom Light

Thermistors

Thermistors are used for various temperature readings. Thermistors provide reliable temperature readings using a resistance which varies based on surrounding temperatures. If a faulty thermistor is suspected it may be tested using an accurate ohmmeter.

All thermistors in the unit are identical. If a thermistor is suspected of being defective the resistance can be verified. Place the thermistor in an ice water bath, the resistance should read 16.1k OHMs +/-5% on your meter.

Thermistor connections must be kept clean. A thermistor connection that has become corroded can cause resistance values from the thermistor to change as they pass through a dirty connection to the board.

It is for that reason that we apply dielectric grease to all of our thermistor connections. Dielectric grease will help to keep thermistor connections clean and dry.

If you change a thermistor in the unit please re-apply dielectric grease to the connection. If you encounter a dirty thermistor connection, you should replace the thermistor and the thermistor harness.

Thermistor error information can be found in the Control Operations - Service section.

This unit has **three** thermistors.

Thermistor one (Zone):

Located along the right hand side wall. It is used to maintain the operating temperature within that zone.

Thermistor two (Evaporator):

Located on the evaporator. It is used for defrost.

Thermistor three (Ambient):

Located in the base of the unit (secured to the condenser). It is used to monitor the ambient temperature within the base compartment. It is used for diagnostics.

THERMISTOR FAILURE

Zone Thermistors

If a zone thermistor(s) in the unit fails the unit will continue to cool in a backup mode (Self Preservation Mode) to preserve the integrity of the contents. The unit will otherwise operate normally.

2000 Series Self Preservation Mode:
The unit will cycle on for 10 minutes then off for 40 minutes.

3000 Series Self Preservation Mode:
Cycle times determined by zone - see chart. The error will be displayed on the main display, “Self Test” and logged in “All Errors.”

Self Preservation Mode Data Table - 3000 Series

Mode	ON	OFF
Beverage/Drinks	10	45
Market/Fresh	10	45
Root	5	90
Pantry	10	45
Deli	10	45
White Wine	5	60
Red Wine	5	60
Sparkling Wine	10	60
Polar	55	5

Evaporator Thermistors

If an evaporator thermistor fails the unit will rely on a preset defrost timer during defrost cycles. The unit will otherwise operate normally. Refer to defrost section.

Ambient Thermistor

If the thermistor fails the unit will operate normally.

Thermistor Resistance Data

Temp (F)	Temp (C)	Nominal Resistance (OHMS)*
-40	-40	169157
-31	-35	121795
-22	-30	88766
-13	-25	65333
-4	-20	48614
5	-15	36503
14	-10	27681
23	-5	21166
32	0	16330
41	5	12696
50	10	9951
59	15	7855
68	20	6246
77	25	5000
86	30	4029
95	35	3266
104	40	2665
113	45	2186
122	50	1803
131	55	1495
140	60	1247
149	65	1044
158	70	879
167	75	743
176	80	631

* (+/-5%)

Defrost

The models below have automatic or frost free design and do not require manual defrosting under normal conditions.

Defrost Settings				
Base Model	**Variant(s)**	**Compressor Run Time Between Defrost (Hours)**	**Duration in Minutes (Maximum)**	**Stop Temperature °F (°C)**
1224	RF	12	45	15 (-9)
1215/1224/2218/2245/ 2224/2260	WC, ZWC	12	45	45 (7)
1215/1224/2218/2245/ 2224/2260	R, RSOD, RDC, BEV, DC, DWR, RGL	12	45	42 (6)
CO29	F	12	18	n/a
CO1224	F	12	18	45 (7)
1224FZR	Freezer Mode	6	45	42(6)
1224FZR	Refrigerator Mode	12	45	42(6)

The defrost settings for 3000 series models are determined by zone.

Defrost Settings by Zone (3000 Series)				
Zones	**Compressor Run Time Between Defrost (Hours)**	**Duration in Minutes (Minimum)**	**Duration in Minutes (Maximum)**	**Stop Temperature °F (°C)**
Beverage/Drinks	12	5	60	42 (6)
Market/Fresh	12	5	60	42 (6)
Root/Root Cellar	12	5	60	45 (7)
Pantry	12	5	60	42 (6)
White Wine	12	5	60	45 (7)
Red Wine	12	5	60	45 (7)
Sparkling Wine	12	5	60	45 (7)
Polar	6	5	20	42 (6)
Deli	12	5	60	42 (6)

Remove Fan and Cover

CONVECTION COOLING

This unit is equipped with an advanced convection cooling system. Convection cooling stabilizes cabinet temperature, cools product faster and increases energy efficiency.

Evaporator Fan

The evaporator fan is responsible for circulating warm air from the refrigeration zone, past the evaporator and back into the refrigerated zone.

The evaporator fan is factory set to have a 1 minute delay at the beginning of a cooling cycle. This delay gives the evaporator time to cool properly before warm air is passed over it. The fan will continue to run for an additional 2 minutes at the end of a cooling cycle. Fan delay times can be modified through the service menu.

Evaporator fan operation is also determined by door switch state. If the door switch circuit opens, the fan will stop. When the door switch circuit is closed the fan will either continue running with the cooling cycle, or if not currently cooling, the fan will run for 1 minute to circulate air and clear any condensation that may have appeared on glass doors and shelves.

Note: If the unit is set to sabbath mode, the evaporator fan will no longer respond to the state of the door switch.

In order to operate efficiently, the evaporator fan blade and vents should be unobstructed and free of any dust buildup.

Evaporator Fan Replacement

Should the evaporator fan need to be replaced follow the steps below.

1. Remove any product from the unit.
2. Uninstall unit.
3. Disconnect power to the unit.
4. Remove rear cover from unit.
5. Disconnect fan electrical connection at rear of unit.
6. Remove insulating foam from refrigerant line pass-through hole as needed to gain clearance for fan plug.
7. Remove internal wine racks.
8. Remove the mounting screws from the rear only of the slide assemblies. The slides can pivot down from the front mounting screws providing ample space to remove evaporator cover.
9. Remove thermistor cover.
10. Remove two evaporator cover screws from top of evaporator cover.

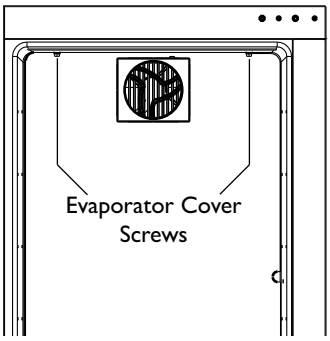

11. Grasp evaporator cover, pull the top forward and up as bottom of cover is installed behind the front edge of the drain trough.
12. While pulling the evaporator cover clear of the unit, it may be necessary to use your free hand to manipulate the fan plug end through the pass-through hole.

13. Remove the 4 screws mounting the fan shroud to the evaporator cover.

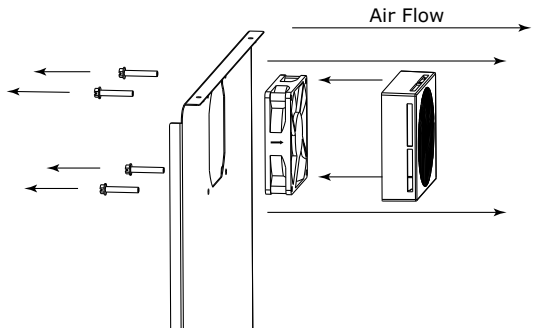

14. Remove and replace fan. Take special care to properly route fan wire.

NOTICE

Fan must be oriented to pull air in through lower evaporator cover vents and push air out at fan mounting location.

15. Installation is the reverse of removal.

16. Care must be taken to assure the bottom of the evaporator cover is reinstalled behind the front edge of the drain trough.

17. Use sealant gum to seal any openings at rear of unit before reinstalling rear cover.

18. Reinstall unit taking care to level, space and secure as found.

U-Line Corporation (U-Line) Limited Warranty

One Year Limited Warranty

For one year from the date of original purchase, this U-Line product warranty covers all parts and labor to repair or replace any part of the product that proves to be defective in materials or workmanship. For products installed and used for normal residential use, material cosmetic defects are included in this warranty, with coverage limited to 60 days from the date of original purchase. All service provided by U-Line under the above warranty must be performed by U-Line factory authorized service, unless otherwise specified by U-Line. Service provided during normal business hours.

Available Second Year Limited Warranty

Beyond the standard one year warranty outlined above, U-Line offers an extension of the one year warranty coverage for an additional second year from the date of purchase, free of charge. To take advantage of this second year warranty, you must register your product with U-Line within two months from the date of purchase at u-line.com providing proof of purchase.

Five Year Sealed System Limited Warranty

For five years from the date of original purchase, U-Line will repair or replace the following parts, labor not included, that prove to be defective in materials or workmanship: compressor, condenser, evaporator, drier, and all connecting tubing. All service provided by U-Line under the above warranty must be performed by U-Line factory authorized service, unless otherwise specified by U-Line. Service provided during normal business hours.

Terms

These warranties apply only to products installed in any one of the fifty states of the United States, the District of Columbia, or the ten provinces of Canada. The warranties do not cover any parts or labor to correct any defect caused by negligence, accident or improper use, maintenance, installation, service, repair, acts of God, fire, flood or other natural disasters. The product must be installed, operated, and maintained in accordance with the U-Line User Guide.

The remedies described above for each warranty are the only ones that U-Line will provide, either under these warranties or under any warranty arising by operation of law. U-Line will not be responsible for any consequential or incidental damages arising from the breach of these warranties or any other warranty, whether express, implied, or statutory. Some states do not allow the exclusion or limitation of incidental or consequential damages, so the above limitation or exclusion may not apply to you. These warranties give you specific legal rights, and you may also have other rights which vary from state to state.

Any warranty that may be implied in connection with your purchase or use of the product, including any warranty of *merchantability* or any warranty *fit for a particular purpose* is limited to the duration of these warranties, and only extends to five years in duration for the parts described in the section related to the five year limited warranty above. Some states do not allow limitations on how long an implied warranty lasts, so the above limitations may not apply to you.

- The warranties only apply to the original purchaser and are non-transferable.
- The second year and five year warranties cover products installed and used for normal residential or designated marine use only.
- The warranties apply to units operated outside only if designed for outdoor use by model and serial number.
- Replacement water filters, light bulbs, and other consumable parts are not covered by these warranties.
- The start of U-Line's obligation is limited to four years after the shipment date from U-Line.
- In-home instruction on how to use your product is not covered by these warranties.
- Food, beverage, and medicine loss are not covered by these warranties.
- If the product is located in an area where U-Line factory authorized service is not available, you may be responsible for a trip charge or you may be required to bring the product to a U-Line factory authorized service location at your own cost and expense.
- Units purchased after use as floor displays, and/or certified reconditioned units, are covered by the limited one year warranty only and no coverage is provided for cosmetic defects.
- Signal issues related to Wi-Fi connectivity are not covered by these warranties.

For parts and service assistance, or to find U-Line factory authorized service near you, contact U-Line:
8900 N. 55th Street, Milwaukee, WI 53223 • u-line.com • onlineservice@u-line.com • +1.800.779.2547

Copyright © 2014/2017 U-Line Corporation. All Rights Reserved. | Publication Number 30379 | 10/2017 Rev. L