SHARP®

OPERATION MANUAL

MODELS

SMD2470AS, SMD3070AS

SMD2470AS

CUSTOMER ASSISTANCE 2

PRECAUTIONS TO AVOID POSSIBLE EXPOSURE TO EXCESSIVE MICROWAVE ENERGY.....2

CONSUMER LIMITED WARRANTY.....3

IMPORTANT SAFETY INSTRUCTIONS.....4

INFORMATION YOU NEED TO KNOW..... 5-7

PART NAMES..... 8-9

BEFORE OPERATING..... 10

MICROWAVE DRAWER™ COOKING 11-16

OTHER FEATURES 17-18

CLEANING AND CARE 19

BEFORE YOU CALL FOR SERVICE..... 20

COOKBOOK INFORMATION..... 21

COOKBOOK ORDER FORM 21

AUTO-TOUCH GUIDE.....23-BACK COVER

MICROWAVE DRAWER™ SMD2470AS, SMD3070AS

CUSTOMER ASSISTANCE

IMPORTANT! Register within 10 days of purchase.

Register ONLINE at www.sharpusa.com/productregistration

To aid in reporting this appliance, please record below the model number and serial number located on the unit. We also suggest you record all the information listed and retain for future reference.

MODEL NUMBER _____ **SERIAL NUMBER** _____

DATE OF PURCHASE _____ / _____ / _____

DEALER _____ **TELEPHONE** _____

SERVICER _____ **TELEPHONE** _____

TO PHONE:

DIAL 1-800-BE-SHARP (237-4277) for:

SERVICE (for your nearest Sharp Authorized Servicer)

PARTS (for your authorized parts distributor)

ADDITIONAL CUSTOMER INFORMATION

TO WRITE:

Sharp Electronics Corporation
Customer Assistance Center
Sharp Plaza Blvd
Memphis, Tennessee 38193

Please provide the following information when you write or call: model number, serial number, date of purchase, your complete mailing address (including zip code), your daytime telephone number (including area code) and description of the problem.

TO ACCESS INTERNET: www.sharpusa.com

PRECAUTIONS TO AVOID POSSIBLE EXPOSURE TO EXCESSIVE MICROWAVE ENERGY

(a) Do not attempt to operate this oven with the door open since open-door operation can result in harmful exposure to microwave energy. It is important not to defeat or tamper with the safety interlocks.

(b) Do not place any object between the oven front face and the door or allow soil or cleaner residue to accumulate on sealing surfaces.

(c) Do not operate the oven if it is damaged. It is particularly important that the oven door close properly and that there is no damage to the: (1) door (bent), (2) hinges and latches (broken or loosened), (3) door seals and sealing surfaces.

(d) The oven should not be adjusted or repaired by anyone except properly qualified service personnel.

SHARP ELECTRONICS CORPORATION warrants to the first consumer purchaser that this Sharp brand product (the "Product"), when shipped in its original container, will be free from defective workmanship and materials, and agrees that it will, at its option, either repair the defect or replace the defective Product or part thereof with a new or remanufactured equivalent at no charge to the purchaser for parts or labor for the period(s) set forth below.

This warranty does not apply to any appearance items of the Product nor to the additional excluded item(s) set forth below nor to any Product the exterior of which has been damaged or defaced, which has been subjected to misuse, abnormal service or handling, or which has been altered or modified in design or construction.

In order to enforce the rights under this limited warranty, the purchaser should follow the steps set forth below and provide proof of purchase to the servicer.

The limited warranty described herein is in addition to whatever implied warranties may be granted to purchasers by law. ALL IMPLIED WARRANTIES INCLUDING THE WARRANTIES OF MERCHANTABILITY AND FITNESS FOR USE ARE LIMITED TO THE PERIOD(S) FROM THE DATE OF PURCHASE SET FORTH BELOW. Some states do not allow limitations on how long an implied warranty lasts, so the above limitation may not apply to you.

Neither the sales personnel of the seller nor any other person is authorized to make any warranties other than those described herein, or to extend the duration of any warranties beyond the time period described above on behalf of Sharp.

The warranties described herein shall be the sole and exclusive warranties granted by Sharp and shall be the sole and exclusive remedy available to the purchaser. Correction of defects, in the manner and for the period of time described herein, shall constitute complete fulfillment of all liabilities and responsibilities of Sharp to the purchaser with respect to the Product, and shall constitute full satisfaction of all claims, whether based on contract, negligence, strict liability or otherwise. In no event shall Sharp be liable, or in any way responsible, for any damages or defects in the Product which were caused by repairs or attempted repairs performed by anyone other than an authorized servicer. Nor shall Sharp be liable or in any way responsible for any incident or consequential economic or property damage. Some states do not allow the exclusion of incidental or consequential damages, so the above exclusion may not apply to you.

THIS WARRANTY GIVES YOU SPECIFIC LEGAL RIGHTS. YOU MAY ALSO HAVE OTHER RIGHTS WHICH VARY FROM STATE TO STATE.

Your product model number & description	SMD2470AS, SMD3070AS or Home Use Microwave Drawer. (Be sure to have this information available when you need service for your Product.)
Warranty period for this product:	One (1) year parts and labor including in-home service. The warranty period continues for an additional four (4) years, for a total of five (5) years, with respect to the magnetron tube in the Product for parts only; labor and service are not provided free of charge for this additional period.
Additional item(s) excluded from warranty coverage (if any):	Non-functional accessories and light bulbs.
Where to obtain service:	From a Sharp Authorized Servicer located in the United States. To find the location of the nearest Sharp Authorized Servicer, call Sharp toll free at 1-800-BE-SHARP (1-800-237-4277).
What to do to obtain service:	In-home service is provided for one year from date of purchase. In-home service can be arranged by calling 1-800-BE-SHARP. Be sure to have Proof of Purchase available.

TO OBTAIN SUPPLY, ACCESSORY OR PRODUCT INFORMATION, CALL 1-800-BE-SHARP or visit www.sharpusa.com. SAVE THE PROOF OF PURCHASE AS IT IS NEEDED SHOULD YOUR OVEN EVER REQUIRE WARRANTY SERVICE.

READ ALL INSTRUCTIONS BEFORE USING

When using the appliance, basic safety precautions should be followed, including the following:

WARNING *To reduce the risk of burns, electric shock, fire, injury to persons or exposure to excessive microwave energy:*

1. Read all instructions before using the appliance.
2. Read and follow the specific "PRECAUTIONS TO AVOID POSSIBLE EXPOSURE TO EXCESSIVE MICROWAVE ENERGY" on page 2.
3. This appliance must be properly grounded. See page 5 for grounding instructions.
4. Install or locate this appliance only in accordance with the provided Installation Manual.
5. Some products such as whole eggs in shell and sealed containers - for example, closed glass jars—are able to explode and should not be heated in the appliance.
6. Use this appliance only for its intended use as described in this manual. Do not use corrosive chemicals or vapors in this appliance. This appliance is specifically designed to heat, cook or dry food. It is not designed for industrial or laboratory use.
7. As with any appliance, close supervision is necessary when used by children.
8. Do not operate this appliance if it has a damaged cord or plug, if it is not working properly or if it has been damaged or dropped.
9. This appliance should be serviced only by qualified service personnel. Contact nearest Sharp Authorized Servicer for examination, repair or adjustment.
10. Do not cover or block any openings on the appliance.
11. Do not store or use this appliance outdoors. Do not use this product near water—for example, near a kitchen sink, in a wet basement, near a swimming pool or similar locations.
12. Do not immerse cord or plug in water.
13. Keep cord away from heated surfaces.
14. Do not climb or sit on the appliance.
15. Be sure that fingers or other objects or materials are not around the appliance opening when the appliance is closed.
16. Do not put fingers or clothes around the drawer guides when the appliance is opened or closed. They could be caught in the guides when the appliance is closed.
17. Be sure that the food and container are shorter than the drawer before closing it. You can refer to the height of the side walls of the drawer.
18. When cleaning appliance sealing surfaces that come together on closing the drawer, use only mild, nonabrasive soaps or detergents applied with a sponge or soft cloth. See cleaning instructions on page 19.
19. To reduce the risk of fire in the appliance cavity:
    - **a** Do not overcook food. Carefully attend appliance when paper, plastic or other combustible materials are placed inside the appliance to facilitate cooking.
    - **b** Remove wire twist-ties from paper or plastic bags before placing bag in appliance.
    - **c** If materials inside the appliance ignite, keep appliance door closed, turn microwave off and shut off power at the fuse or circuit breaker panel.
    - **d** Do not use the appliance for storage purposes. Do not leave paper products, cooking utensils, or food in the appliance when not in use.
20. Liquids, such as water, coffee or tea are able to be overheated beyond the boiling point without appearing to be boiling due to surface tension of the liquid. Visible bubbling or boiling when the container is removed from the appliance is not always present. THIS COULD RESULT IN VERY HOT LIQUIDS SUDDENLY BOILING OVER WHEN A SPOON OR OTHER UTENSIL IS INSERTED INTO THE LIQUID.

    To reduce the risk of injury to persons:
    - **a** Do not overheat the liquid.
    - **b** Stir the liquid both before and halfway through heating it.
    - **c** Do not use straight-sided containers with narrow necks. Use a wide-mouthed container.
    - **d** After heating, allow the container to stand in the appliance at least for 20 seconds before removing the container.
    - **e** Use extreme care when inserting a spoon or other utensil into the container.
21. If the appliance light fails, consult a SHARP AUTHORIZED SERVICER.

SAVE THESE INSTRUCTIONS

ABOUT UNPACKING AND EXAMINING YOUR MICROWAVE DRAWER

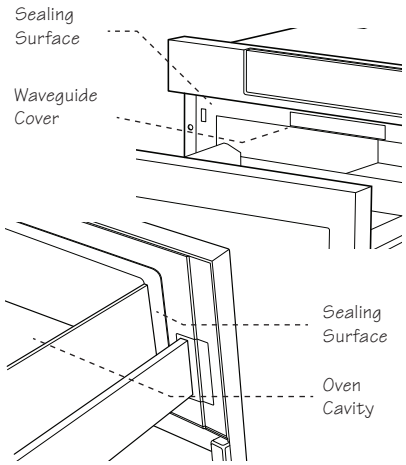

1. Remove all packing materials from inside the Microwave Drawer. DO NOT REMOVE THE WAVEGUIDE COVER, which is located on the top of the Microwave Drawer.
2. Remove the feature sticker, if there is one. Check the drawer for any damage, such as misaligned or bent drawer, damaged drawer seals and sealing surfaces, broken or loose drawer guides and dents inside the cavity or on the front side of the drawer. If there is any damage, do not operate the Microwave Drawer and contact your dealer or a SHARP AUTHORIZED SERVICER.

RADIO OR TV INTERFERENCE

Should there be any interference caused by the Microwave Drawer to your radio or TV, check that the Microwave Drawer is on a different electrical circuit, relocate the radio or TV as far away from the drawer as feasible or check position and signal of receiving antenna.

GROUNDING INSTRUCTIONS

This appliance must be grounded. The Microwave Drawer is equipped with a cord having a grounding wire with a grounding plug. It must be plugged into a wall receptacle that is properly installed and grounded in accordance with the National Electrical Code and local codes and ordinances. In the event of an electrical short circuit, grounding reduces risk of electric shock by providing an escape wire for the electric current.

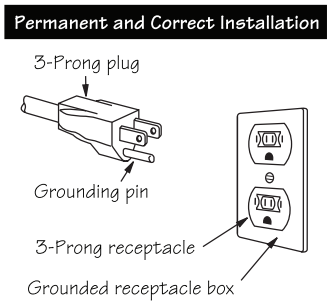

WARNING – Improper use of the grounding plug can result in a risk of electric shock. **Do not use an extension cord. If the power supply cord is too short, have a qualified electrician or serviceman install an outlet near the appliance.**

If you have any questions about the grounding or electrical instructions, consult a qualified electrician or service person.

ABOUT YOUR MICROWAVE DRAWER

ALWAYS have food in the Microwave Drawer when it is on to absorb the microwave energy.

The vent under the Microwave Drawer must not be blocked. During microwaving, steam may come from the right side of the vent.

When using the Microwave Drawer at power levels below 100%, you may hear the magnetron cycling on and off. It is normal for the exterior of the Microwave Drawer to be warm to the touch when cooking or reheating.

Condensation is a normal part of microwave cooking. Room humidity and the moisture in food will influence the amount of moisture that condenses in the Microwave Drawer. Generally, covered foods will not cause as much condensation as uncovered ones.

The Microwave Drawer is for food preparation only. It should not be used to dry clothes or newspapers.

Your Microwave Drawer is rated 1000 watts by using the IEC Test Procedure. In using recipes or package directions, check food a minute or two before the minimum time and add time accordingly.

When opening or closing the Microwave Drawer quickly, food in the Microwave Drawer may be spilled. To clean, please refer to the Cleaning and Care section on page 19.

A good microwave cookbook is a valuable asset. Check it for microwave cooking principles, techniques, hints and recipes. See page 21 for ordering the Sharp Carousel Microwave Cookbook.

ABOUT MICROWAVE COOKING

- Arrange food carefully. Place thickest areas towards outside of dish.
- Watch cooking time. Cook for the shortest amount of time indicated and add more as needed. Food severely overcooked can smoke or ignite.
- Cover foods while cooking. Check recipe or cookbook for suggestions: paper towels, wax paper, microwave plastic wrap or a lid. Covers prevent spattering and help foods to cook evenly.
- Shield with small flat pieces of aluminum foil any thin areas of meat or poultry to prevent overcooking before dense, thick areas are cooked thoroughly.
- Stir foods from outside to center of dish once or twice during cooking, if possible.

- Turn foods over once during microwaving to speed cooking of such foods as chicken and hamburgers. Large items like roasts must be turned over at least once.
- Rearrange foods such as meatballs halfway through cooking both from top to bottom and from right to left.
- Add standing time. Remove food from Microwave Drawer and stir, if possible. Cover for standing time which allows the food to finish cooking without overcooking.
- Check for doneness. Look for signs indicating that cooking temperatures have been reached.

  Doneness signs include:

  - Food steams throughout, not just at edge.
  - Center bottom of dish is very hot to the touch.
  - Poultry thigh joints move easily.
  - Meat and poultry show no pinkness.
  - Fish is opaque and flakes easily with a fork.

ABOUT UTENSILS AND COVERINGS

It is not necessary to buy all new cookware. Many pieces already in your kitchen can be used successfully in your new Microwave Drawer. Make sure the utensil does not touch the interior walls during cooking.

Use these utensils for safe microwave cooking and reheating:

- glass ceramic (Pyroceram®), such as Corningware®.
- heat-resistant glass (Pyrex®)
- microwave-safe plastics
- microwave-safe paper plates
- microwave-safe pottery, stoneware and porcelain
- browning dish (Do not exceed recommended preheating time. Follow manufacturer's directions.)

These items can be used for short time reheating of foods that have little fat or sugar in them:

- wood, straw, wicker

DO NOT USE

- metal pans and bakeware
- dishes with metallic trim
- non-heat-resistant glass
- non-microwave-safe plastics (margarine tubs)
- recycled paper products
- brown paper bags
- food storage bags
- metal twist-ties

Should you wish to check if a dish is safe for microwaving, place the empty dish in the oven and microwave on HIGH for 30 seconds. A dish which becomes very hot should not be used.

The following coverings are ideal:

- Paper towels are good for covering foods for reheating and absorbing fat while cooking bacon.
- Wax paper can be used for cooking and reheating.
- Plastic wrap that is specially marked for microwave use can be used for cooking and reheating. DO NOT allow plastic wrap to touch food. Vent so steam can escape.
- Lids that are microwave-safe are a good choice because heat is kept near the food to hasten cooking.
- Oven cooking bags are good for large meats or foods that need tenderizing. DO NOT use metal twist ties. Remember to slit bag so steam can escape.

How to use aluminum foil in your Microwave Drawer:

- Small flat pieces of aluminum foil placed smoothly on the food can be used to shield areas that are either defrosting or cooking too quickly.
- Foil should not come closer than one inch to any surface of the Microwave Drawer.

Should you have questions about utensils or coverings, check a good microwave cookbook or follow recipe suggestions.

ACCESSORIES There are many microwave accessories available for purchase. Evaluate carefully before you purchase so that they meet your needs. A microwave-safe thermometer will assist you in determining correct doneness and assure you that foods have been cooked to safe temperatures. Sharp is not responsible for any damage to the Microwave Drawer when accessories are used.

ABOUT CHILDREN AND THE MICROWAVE

Children below the age of 7 should use the Microwave Drawer with a supervising person very near to them. Between the ages of 7 and 12, the supervising person should be in the same room. The child must be able to reach the Microwave Drawer comfortably.

At no time should anyone be allowed to lean or swing on the Microwave Drawer.

Children should be taught all safety precautions: use potholders, remove coverings carefully, pay special attention to packages that crisp food because they may be extra hot.

Don't assume that because a child has mastered one cooking skill he/she can cook everything.

Children need to learn that the Microwave Drawer is not a toy. See page 18 for Control Lock feature.

ABOUT SAFETY

- Check foods to see that they are cooked to the United States Department of Agriculture's recommended temperatures.

145˚F	-	Fish.
160˚F	-	Pork, ground beef/veal/lamb, egg dishes
165˚F	-	For leftover, ready-to-reheat refrigerated, and deli and carry-out "fresh" food. Whole, pieces and ground turkey/chicken/duck.

To test for doneness, insert a meat thermometer in a thick or dense area away from fat or bone. NEVER leave the thermometer in the food during cooking, unless it is approved for microwave use.

- ALWAYS use potholders to prevent burns when handling utensils that are in contact with hot food. Enough heat from the food can transfer through utensils to cause skin burns.
- Avoid steam burns by directing steam away from the face and hands. Slowly lift the farthest edge of a dish's covering and carefully open popcorn and oven cooking bags away from the face.
- Stay near the Microwave Drawer while it's in use and check cooking progress frequently so that there is no chance of overcooking food.
- NEVER use the Microwave Drawer for storing cookbooks or other items.
- Select, store and handle food carefully to preserve its high quality and minimize the spread of foodborne bacteria.
- Keep waveguide cover clean. Food residue can cause arcing and/or fires. See page 19.

ABOUT FOODS

FOOD	DO	DON'T
Eggs, sausages, fruits & vegetables	• Puncture egg yolks before cooking to prevent "explosion". • Pierce skins of potatoes, apples, squash, hot dogs and sausages so that steam escapes.	• Cook eggs in shells. • REHEAT whole eggs. • Dry nuts or seeds in shells.
Popcorn	• Use specially bagged popcorn for the microwave. • Listen while popping corn for the popping to slow to 1 or 2 seconds or use special **POPCORN** pad.	• Pop popcorn in regular brown bags or glass bowls. • Exceed maximum time on popcorn package.
Baby food	• Transfer baby food to small dish and heat carefully, stirring often. Check temperature before serving. • Put nipples on bottles after heating and shake thoroughly. "Wrist" test before feeding.	• Heat disposable bottles. • Heat bottles with nipples on. • Heat baby food in original jars.
General	• Cut baked goods with filling after heating to release steam and avoid burns. • Stir liquids briskly before and after heating to avoid "eruption". • Use deep bowl, when cooking liquids or cereals, to prevent boilovers. • Food should be shorter than the Microwave Drawer. Please refer to the height of side walls of the drawer.	• Heat or cook in closed glass jars or airtight containers. • Can in the microwave as harmful bacteria may not be destroyed. • Deep fat fry. • Dry wood, gourds, herbs or wet papers.

MICROWAVE DRAWER

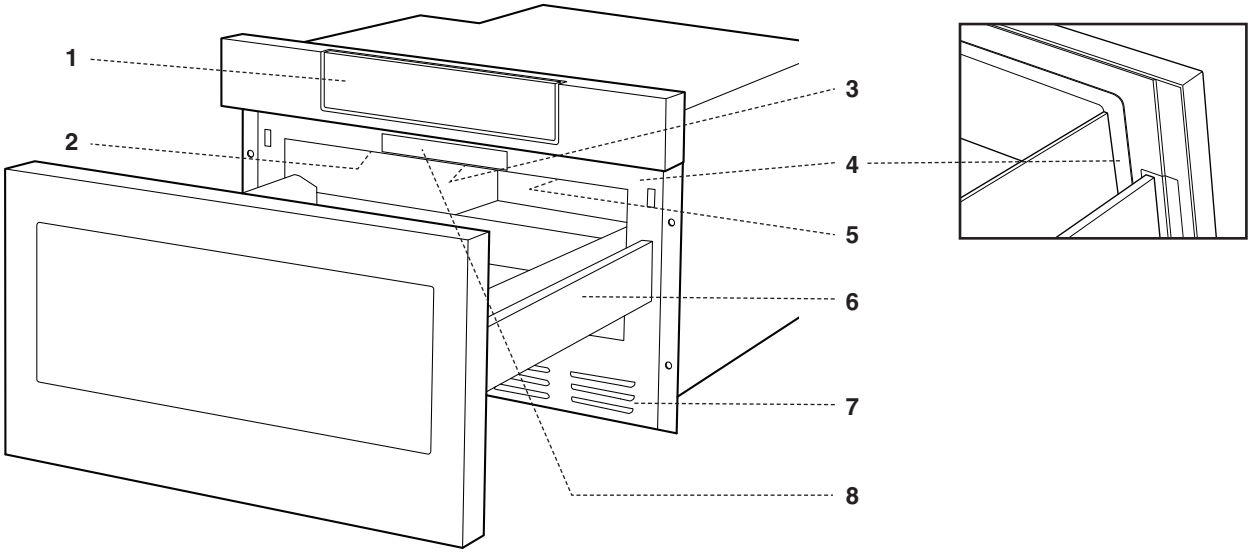

1 Hidden control panel & keysheet
2 Waveguide cover DO NOT REMOVE
3 Name plate: open the Microwave Drawer fully. The label is beyond the back wall of the microwave cavity facing up from the flat surface.
4 Drawer sealing surfaces
5 Drawer light
6 Microwave Drawer guides
7 Vent
8 Menu label
9 Keysheet

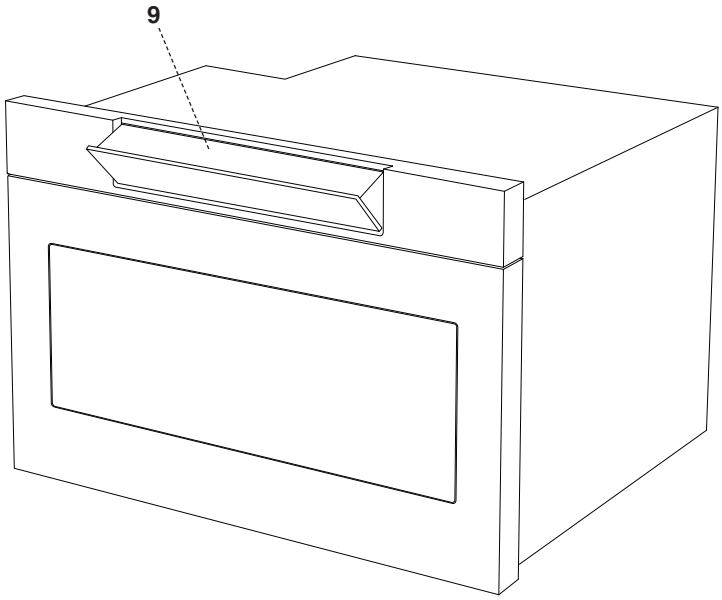

The keysheet is hidden behind the control panel door on the top front face of the unit. To open, simply pull the front top edge down until the key sheet is in full view. To close, push the panel upward to the closed position. The panel will be secured by magnetic latches in both open and closed positions.

KEYSHEET

Numbers next to the keysheet illustration indicate pages on which there are feature descriptions and usage information.

MENU LABEL

POTATOES	COOK	VEGETABLES	DEFROST	BEVERAGE	MELT/SOFTEN	
1 Baked Potatoes 2 Sweet Potatoes	1 Ground Meat 2 Fish/Seafood 3 Frozen Entree 4 White Rice 5 Brown Rice	1 Quick Fresh Vegetables 2 Longer Fresh Vegetables 3 Steamer Bag 4 Frozen Vegetables	1 Ground Meat 2 Steaks/Chops 3 Boneless Poultry 4 Bone-in Poultry 5 Roast 6 Casserole and Soup	1 Beverage Reheat 2 Hot Water 3 Hot Cereal	Melt: 1 Butter, 2 Chocolate Soften: 3 Ice Cream, 4 Cream Cheese Warm: 5 Syrup, 6 Dessert Toppings	TLAB-B105MRR0

Before operating your new Microwave Drawer make sure you read and understand this operation manual completely.

• Before the Microwave Drawer can be used, follow these steps:

1 Plug in the Microwave Drawer. ENJOY YOUR MICRO- WAVE TOUCH CLEAR AND TOUCH CLOCK will appear.

2 Touch the **STOP/CLEAR** pad. : will appear.

3 Set clock.

TO SET THE CLOCK

1 Touch **TIMER/CLOCK** pad and number 2.

2 Touch number pads for correct time of day and touch **TIMER/CLOCK** pad again.

This is a 12 hour clock. If you attempt to enter an incorrect clock time, ERROR will appear in the display. Touch the **STOP/CLEAR** pad and re-enter the time.

• If the electrical power supply to your Microwave Drawer should be interrupted, the display will intermittently show ENJOY YOUR MICRO- WAVE TOUCH CLEAR AND TOUCH CLOCK after the power is reinstated. If this occurs during cooking, the program will be erased. The time of day will also be erased. Simply touch **STOP/CLEAR** pad and reset the clock for the correct time of day.

Note:

- The Microwave Drawer can be programmed with the drawer open except for **START/+30 SEC.**

TIMER

1 Touch **TIMER/CLOCK** pad and number 1.

2 Enter time.

3 Touch **TIMER/CLOCK** pad again.

To cancel timer, touch **STOP/CLEAR**.

STOP/CLEAR

Touch the **STOP/CLEAR** pad to:

1 Erase if you make a mistake during programming.

2 Cancel timer.

3 Stop the Microwave Drawer temporarily during timed cooking.

4 Return the time of day to the display.

5 Cancel a program during cooking, touch twice for timed cooking.

OPEN OR CLOSE MICROWAVE DRAWER

Always press the **OPEN/CLOSE** pad on the control panel to open or close the microwave. Do not push or pull the drawer microwave by hand, except in the case of emergency, such as a power failure. If necessary, push or pull slowly.

TIME COOKING

Your Microwave Drawer can be programmed for 99 minutes 99 seconds (99.99). Always enter the seconds after the minutes, even if they are both zeros.

- Suppose you want to cook for 5 minutes at 100%.

1 Enter cooking time 5 0 0. 5.00 TOUCH START OR TOUCH POWER LEVEL

2 To cook at 100% power (High), touch **START/+30 SEC** pad.

TO SET POWER LEVEL

There are eleven preset power levels.

Using lower power levels increases the cooking time, which is recommended for foods such as cheese, milk and long slow cooking of meats. Consult a microwave cookbook or recipes for specific recommendations.

- Suppose you want to defrost for 5 minutes at 30%.

1 Enter defrost time 5 0 0. 5.00

2 Touch **POWER LEVEL** pad 8 times.

3 Touch **START/+30 SEC** pad.

TOUCH POWER LEVEL PAD NUMBER OF TIMES FOR DESIRED POWER	APPROXIMATE PERCENTAGE OF POWER	COMMON WORDS FOR POWER LEVELS
POWER LEVEL x 1	100%	High
POWER LEVEL x 2	90%	
POWER LEVEL x 3	80%	
POWER LEVEL x 4	70%	Medium High
POWER LEVEL x 5	60%	
POWER LEVEL x 6	50%	Medium
POWER LEVEL x 7	40%	
POWER LEVEL x 8	30%	Med Low/Defrost
POWER LEVEL x 9	20%	
POWER LEVEL x 10	10%	Low
POWER LEVEL x 11	0%	

SENSOR SETTINGS

Sharp's Sensor is a semi-conductor device that detects the vapor (moisture and humidity) emitted from the food as it heats. The sensor adjusts the cooking times and power levels for various foods and quantities.

USING SENSOR SETTINGS:

1 After the Microwave Drawer is plugged in, wait 2 minutes before using any sensor setting.

2 Be sure the exterior of the cooking container and the interior of the Microwave Drawer are dry. Wipe off any moisture with a dry cloth or paper towel.

3 The sensor works with foods at normal storage temperature. For example, popcorn would be at room temperature.

4 Any sensor selection can be programmed with More or Less Time Adjustment. See page 18.

5 More or less food than the quantity listed in the charts should be cooked following the guidelines in any microwave cookbook.

6 During the first part of sensor use, the food name will appear on the display. Do not open the Microwave Drawer or touch **STOP/CLEAR** during this part of the cycle. The measurement of vapor will be interrupted. If this occurs, an error message will appear. To continue cooking, touch the **STOP/CLEAR** pad and cook manually.

When the sensor detects the vapor emitted from the food, the remainder of cooking/reheating time will appear. The Microwave Drawer may be opened when the remaining time appears on the display. At this time, you may stir or season food, as desired.

7 Except for Popcorn, if the sensor does not detect vapor properly when cooking other foods, ERROR will be displayed, and the microwave will turn off.

8 Check food temperature after cooking. If additional time is needed, continue to cook manually.

9 Each food has a cooking hint. Touch the **HELP/ SETTINGS** pad when the HELP indicator is lighted in the display.

COVERING FOODS:

Some foods work best when covered. Use the cover recommended in the charts for these foods. You may refer to the hints by touching the **HELP/SETTINGS** pad. See page 17.

1. Casserole lid.
2. Plastic wrap: Use plastic wrap recommended for microwave cooking. Cover dish loosely; allow approximately 1/2 inch to remain uncovered to allow steam to escape. Plastic wrap should not touch food.
3. Wax paper: Cover dish completely; fold excess wrap under dish to secure. If dish is wider than paper, overlap two pieces at least one inch to cover.

Be careful when removing any covering to allow steam to escape away from you.

SENSOR

POPCORN, REHEAT, POTATOES, VEGETABLES, COOK

You can cook or reheat many foods and don't need to calculate cooking time or power level.

- Suppose you want to cook baked potatoes.

1 Touch **Potatoes** pad once. SEE LABEL SELECT FOOD NUMBER

2 See Menu Label. Select desired food by touching number pad. Ex: Touch 1 for baked potatoes.

3 Touch **START/+30 SEC** pad.

Note:

- To heat or cook other foods or foods above or below the quantity allowed on the chart, cook manually.

POPCORN, REHEAT, POTATOES CHART

FOOD	AMOUNT	PROCEDURE
POPCORN	Only 1 package at a time	Use only popcorn packaged for the microwave. Try several brands to decide which you like. Do not try to pop unpopped kernels.
	2.85 - 3.5 oz. (Regular / Regular light)	Touch **POPCOR**N pad once.
	1.2 - 1.75 oz. (Mini / Snack)	Touch **POPCORN** pad twice.
REHEAT	4 - 36 oz.	Place in dish or casserole slightly larger than amount to be reheated. Flatten, if possible. Cover with lid, plastic wrap or wax paper. Use covers such as plastic wrap or lids with larger quantities of more dense foods such as stews. After reheating, stir well, if possible. Re-cover and allow to stand 2 to 3 minutes. Foods should be very hot. If not, continue to heat with variable power and time.
POTATOES	1 - 6 med	Pierce. Place on paper-towel-lined Microwave Drawer. After cooking, remove from microwave, wrap in aluminum foil and let stand 5 to 10 minutes. Touch 1 for Baked Potatoes. Touch 2 for Sweet Potatoes.

VEGETABLES CHART

FOOD	AMOUNT	PROCEDURE
1 Quick Fresh Vegetables		Wash and place in casserole. Add no water if vegetables have just been washed. Cover with lid for tender vegetables. Use plastic wrap for tender-crisp vegetables. After cooking, stir, if possible. Let stand, covered, for 2 to 5 minutes.
Broccoli	.25 - 2.0 lb.	
Brussels sprouts	.25 - 2.0 lb.	
Cabbage	.25 - 2.0 lb.	
Cauliflower (flowerets)	.25 - 2.0 lb.	
Cauliflower (whole)	1 med.	
Spinach	.25 - 1.0 lb.	
Zucchini	.25 - 2.0 lb.	
Baked apples	2 - 4 med.	
2 Longer Fresh Vegetables		Place in casserole. Add 1 - 4 tablespoons water. Cover with lid for tender vegetables. Use plastic wrap cover for tender-crisp vegetables. After cooking, stir, if possible. Let stand, covered, for 2 to 5 minutes.
Carrots, sliced	.25 - 1.5 lb.	
Corn on the cob	2 - 4	
Green beans	.25 - 1.5 lb.	
Winter squash:		
diced	.25 - 1.5 lb.	
halves	1 - 2	
3 Steamer Bag	6 - 17 oz.	Place bag in the microwave drawer. Follow instructions on the bag.
4 Frozen Vegetables	.25 - 1.25 lb.	Add no water. Cover with lid or plastic wrap. After cooking, stir and let stand, covered, for 3 minutes.

COOK CHART

FOOD	AMOUNT	PROCEDURE
1 Ground Meat	.25 - 2.0 lb.	Use this setting to cook ground beef or turkey as patties or in a casserole to be added to other ingredients. Place patties on a microwave-safe rack and cover with wax paper. Place ground meat in a casserole and cover with wax paper or plastic wrap. When microwave stops, turn patties over or stir meat in casserole to break up large pieces. Re-cover and touch **START/+30 SEC**. After cooking, let stand, covered, for 2 to 3 minutes.
2 Fish/Seafood	.25 - 2.0 lb.	Arrange in ring around shallow glass dish (roll fillet with edges underneath). Cover with vented plastic wrap. After cooking, let stand, covered for 3 minutes.
3 Frozen Entrees	6 - 17 oz.	Use this pad for frozen convenience foods. It will give satisfactory results for most brands. You may wish to try several and choose your favorite. Remove package from outer wrapping and follow package directions for covering. After cooking, let stand, covered, for 1-3 minutes
4 White Rice	.5 - 2.0 cups	Place rice into a deep casserole and add double quantity of water. Cover with lid or plastic wrap. After cooking, stir, cover and let stand 3 to 5 minutes or until all liquid has been absorbed.
5 Brown Rice	.5 - 2.0 cups	

Rice	Water	Size of casserole
.5 cup	1 cup	1.5 quart
1 cup	2 cups	2 quart
1.5 cups	3 cups	2.5 or 3 quart
2 cups	4 cups	3 quart or larger

BEVERAGE

BEVERAGE enables you to reheat coffee or tea to restore to a more suitable drinking temperature or to make instant coffee, tea or hot cereal.

- Suppose you want to make 2 cups of coffee.

1 Touch **BEVERAGE** pad once. SEE LABEL SELECT FOOD NUMBER

2 See Menu Label. Select desired selection by touching number pad. Ex: Touch 2 to make coffee.

3 Repeating touching same number pad to select quantity. Ex: Touch 2 two more times for 2 cups of coffee.

4 Touch **START/+30 SEC** pad.

Note:

- BEVERAGE can be programmed with More or Less Time Adjustment. See page 18.
- Should you attempt to enter more or less than the allowed amount, an error message will appear in the display.

BEVERAGE CENTER CHART

FOOD	AMOUNT	PROCEDURE
1 Beverage Reheat	.5 - 2.0 cups	This setting for good for restoring cooled beverage to a better drinking temperature. Touch number 1 pad for a 0.5 cup increase per touch. Stir after heating.
2 Hot Water	1 - 6 cups	Use this setting for heating COLD TAP WATER to a temperature somewhat below the boiling point to make instant coffee or tea. Touch number 2 pad for 1 cup increase per touch. Stir liquid briskly before and after heating to avoid “eruption”.
3 Hot Cereal	1 - 6 servings	Use individual packets or bulk cereal in your favorite variety: oatmeal, oat bran, cream of wheat, farina or wheatena. Follow the package directions for the correct amount of water or milk. To prevent boil overs, it is very important to choose a large container because microwave cooking of cereal causes high boiling. If the oven stops, stir and touch START/+30 SEC. After cooking, stir and let stand, covered, for 2 minutes.

DEFROST

Use this feature to defrost the foods shown in the DEFROST CHART below.

1 Touch **DEFROST** pad.
SEE | LABEL | SELECT | FOOD | NUMBER

2 See Menu Label. Select desired food by touching the number pad. Ex: Touch 2 for steaks/chops. STEAKS | CHOPS | ENTER | WEIGHT

3 Enter weight by touching number pads. 1.0 Lb

4 Touch **START/+30 SEC** pad.

The oven will stop so that the food can be checked.

5 After the first stage, open the Microwave Drawer. Turn steak over and shield any warm portions. Close the Microwave Drawer. Touch **START/+30 SEC** pad.

6 After the second stage, open the Microwave Drawer. Shield any warm portions. Close the Microwave Drawer. Touch **START/+30 SEC** pad.

7 After defrost cycle ends, cover and let stand as indicated in the chart below.

Note:

- Defrost can be programmed with More or Less Time Adjustment. See page 18.
- To defrost other foods or foods above or below the weights allowed on the DEFROST CHART, see MANUAL DEFROST below.
- Check foods when oven signals. After final stage, small sections may still be icy. Let stand to continue thawing. Do not cook until all ice crystals are thawed.
- Shielding prevents cooking from occurring before the center of the food is defrosted. Use small smooth strips of aluminum foil to cover edges and thinner sections of the food.

DEFROST CHART

FOOD	AMOUNT	PROCEDURE
1 Ground Meat	.5 - 2.0 lb	Remove any thawed pieces after each audible signal. Let stand, covered, for 5 to 10 minutes.
2 Steaks/Chops	.5 - 3.0 lb	After each audible signal, rearrange and if there are warm or thawed portions, shield with small flat pieces of aluminum foil. Remove any meat or fish that is almost defrosted. Let stand, covered, for 10 to 20 minutes.
3 Boneless Poultry	.5 - 2.0 lb	After each audible signal, if there are warm or thawed portions, rearrange or remove. Let stand, covered, for 10 to 20 minutes.
4 Bone-in Poultry	.5 - 3.0 lb	After each audible signal, rearrange pieces or remove portions should they become warm or thawed. Let stand, covered, for 10 to 20 minutes.
5 Roast	2.0 - 4.0 lb	Start defrosting with fat side down. After each stage, turn roast over and shield the warm portions with aluminum foil. Let stand, covered, for 30 to 60 minutes.
6 Casserole Soup	2 - 6 cups 1 - 6 cups	After each audible signal, break apart and remove any defrosted part. At end, stir well and let stand, covered, for 5 to 10 minutes.

MANUAL DEFROST

If the food that you wish to defrost is not listed on the DEFROST CHART or is above or below the limits in the AMOUNT column on the DEFROST CHART, you need to defrost manually.

You can defrost any frozen food, either raw or previously cooked, by using POWER LEVEL at 30%. Follow the exact 3-step procedure found under TO SET POWER LEVEL on page 11. Estimate defrosting time and touch POWER LEVEL pad eight times for 30% power.

For either raw or previously cooked frozen food the rule of thumb is approximately 4 minutes per pound. For example, defrost 4 minutes for 1 pound of frozen spaghetti sauce.

Always stop the oven periodically to remove or separate the portions that are defrosted. If food is not defrosted at the end of the estimated defrosting time, program the oven in 1 minute increments on POWER LEVEL 30% until totally defrosted.

When using plastic containers from the freezer, defrost only long enough to remove from the plastic in order to place in a microwave-safe dish.

MELT/SOFTEN

Melt and Soften automatically compute the correct heating time and microwave power level for melting, softening and warming foods shown in the chart below.

1 Touch **MELT/SOFTEN** pad once. SEE LABEL SELECT FOOD NUMBER

2 See Menu Label. Select desired food by touching number pad. Ex: Touch 2 for chocolate.

3 Repeat touching same number pad to select quantity. Ex: Touch 2 two more times for 1 square.

4 Touch **START/+30 SEC** pad.

Note:

- Melt/Soften can be programmed with More or Less Time Adjustment. See page 18.
- To melt, soften or warm other food or foods above or below the quantity allowed on the MELT/SOFTEN CHART, use manual operation.

MELT/SOFTEN CHART

FOOD	AMOUNT	PROCEDURE
Melt		Use a Pyrex measuring cup. Cover with plastic wrap.
1 Butter	2 tbsp .5 cup	After touching **MELT/SOFTEN,** touch 1 two times for 2 tbsp. After touching **MELT/SOFTEN**, touch 1 three times for .5 cup.
2 Chocolate	1 cup chips 1 square	After touching **MELT/SOFTEN**, touch 2 two times for 1 cup chips. After touching **MELT/SOFTEN**, touch 2 three times for 1 square.
Soften		DO NOT COVER.
3 Ice cream	1 pint 1 1/2 qt.	After touching **MELT/SOFTEN**, touch 3 two times for 1 pint. After touching **MELT/SOFTEN**, touch 3 three times for 1 1/2 quart.
4 Cream cheese	3 oz. 8 oz.	After touching **MELT/SOFTEN**, touch 4 two times for 3 oz. After touching **MELT/SOFTEN**, touch 4 three times for 8 oz.
Warm		Use a Pyrex measuring cup. DO NOT COVER.
5 Syrup	1/4 cup 1/2 cup	After touching **MELT/SOFTEN**, touch 5 two times for 1/4 cup. After touching **MELT/SOFTEN**, touch 5 three times for 1/2 cup.
6 Dessert Toppings	1/4 cup 1/2 cup	After touching **MELT/SOFTEN**, touch 6 two times for 1/4 cup. After touching **MELT/SOFTEN**, touch 6 three times for 1/2 cup.

KEEP WARM

Keep Warm allows you to keep food warm up to 30 minutes.

DIRECT USE

1 Touch **KEEP WARM** pad. ENTER TIME UP TO 30 MINUTES

2 Enter desired time by touching the number pads. To enter 30 minutes, touch 3 0 0 0. 30.00 TOUCH START

3 Touch **START/+30 SEC** pad.

The oven will start. The display will show 30.00 and count down. KEEP WARM will be displayed intermittently during the count down.

WITH MANUAL COOKING

1 Enter desired cooking time and power level.

2 Touch **KEEP WARM** pad.

3 Enter desired warming time up to 30 minutes.

4 Touch **START/+30 SEC** pad.

The operation will start. When the cooking time is complete, a long tone will sound and KEEP WARM will start. The display will count down. KEEP WARM will be displayed intermittently during the count down.

Note:

- If you attempt to enter more than 30 minutes for KEEP WARM, an error message will appear in the display.
- KEEP WARM cannot be programmed with SENSOR (POPCORN, REHEAT, POTATOES, VEGETABLES & COOK), BEVERAGE or DEFROST..

HELP/SETTINGS

If the electrical power supply to your Microwave Drawer should be interrupted, the display will intermittently show ENJOY YOUR MICRO- WAVE TOUCH CLEAR AND TOUCH CLOCK after the power is reinstated. If this occurs, the **HELP/SETTINGS** option you input will be erased. Simply touch STOP/CLEAR pad and reset.

AUDIBLE SIGNAL ELIMINATION

At the end of timed cook, beeps will sound. The audible signal can be turned off if you prefer quiet operation.

TO TURN SOUND OFF

1 Touch **HELP/SETTINGS** pad. TOUCH AGAIN

2 Touch **HELP/SETTINGS** pad again. SOUND OFF ? TOUCH START

3 Touch **START/+30 SEC** pad. The display shows SOUND OFF

TO RESTORE SOUND

1 Touch **HELP/SETTINGS** pad. TOUCH AGAIN

2 Touch **HELP/SETTINGS** pad again. SOUND ON ? TOUCH START

3 Touch **START/+30 SEC** pad. The display shows SOUND ON

END OF COOKING REMINDER

At end of timed cooking, the microwave will signal every 10 seconds for the first minute; then every 3 minutes until STOP/CLEAR pad is touched, up to one hour.

TO TURN REMINDER OFF

1 Touch **HELP/SETTINGS** pad three times. The display shows REMIND SIGNAL OFF ? TOUCH START .

2 Touch **START/+30 SEC** pad. The display shows REMIND SIGNAL OFF .

TO TURN REMINDER SIGNAL BACK ON

1 Touch **HELP/SETTINGS** pad three times. The display shows REMIND SIGNAL ON ? TOUCH START .

2 Touch **START/+30 SEC** pad. The display shows REMIND SIGNAL ON .

AUTO START

If you wish to program the Microwave Drawer to begin cooking automatically at a designated time of day, follow this procedure.

1 Touch **HELP/SETTINGS** pad 4 times. The display shows AUTO START TOUCH START

2 Touch **START/+30 SEC** pad. ENTER START TIME

3 Enter start time. 4:30 TOUCH CLOCK

4 Touch **TIMER/CLOCK** pad. ENTER COOKING TIME

5 Touch the number pads to enter cooking time. 20.00 TOUCH START OR TOUCH POWER LEVEL

Touch **POWER LEVEL** pad repeatedly until the desired power level is reached. TOUCH START

6 Touch **START/+30 SEC** pad.

DEMONSTRATION MODE

TO SELECT DEMO MODE

1 Touch **HELP/SETTINGS** pad five times. The display shows DEMO ON? HOLD START 3 SEC .

2 Hold **START/+30 SEC** pad for 3 seconds. The display shows DEMO ON .

TO CANCEL DEMO MODE

1 Touch **HELP/SETTINGS** pad five times. The display shows DEMO OFF ? TOUCH START .

2 Touch **START/+30 SEC** pad. The display shows DEMO OFF

Note:

- Microwave Drawer doesn't heat in Demo Mode.
- Display counts down quickly.

SLEEP MODE

The backlight of the display will automatically turn off after 15 minutes if the unit has not been in operation. The information in the display will remain, but the display will not remain lighted. The display will not go into the Sleep Mode during cooking or while the Demo Mode is set.

If the display is "sleeping", simply touch the control panel or open/close the door to turn the back light on. The Sleep Mode feature can be deactivated, if desired.

TO TURN SLEEP MODE OFF

1 Touch **HELP/SETTINGS** pad six times. The display shows SLEEP MODE OFF ? .

2 Touch **START/+30 SEC** pad. The display shows SLEEP MODE OFF .

TO TURN SLEEP MODE BACK ON

1 Touch **HELP/SETTINGS** pad 6 times. The display shows SLEEP MODE ON ? .

2 Touch **START/+30 SEC** pad. The display shows SLEEP MODE ON .

CONTROL LOCK

The Control Lock prevents unwanted drawer operation such as by small children. The Microwave Drawer can be set so that the control panel and the automatic door mechanism are deactivated or locked.

TO LOCK

Touch **STOP/CLEAR** pad and hold for 3 seconds. The display shows LOCK ON .

TO UNLOCK

Touch **STOP/CLEAR** pad and hold for 3 seconds. The display shows LOCK OFF .

The **Control Lock** is canceled when the electrical power supply to your oven is interrupted. Set the **Control Lock** again when power to the oven is restored.

HELP

Each setting of REHEAT, COOK, POPCORN, KEEP WARM, REHEAT and DEFROST has a cooking hint. If you wish to check, touch **HELP/SETTINGS** whenever HELP is lighted in the Interactive Display for these and other manual operation hints.

+30 SEC

+30 SEC allows you to cook for 30 seconds at 100% by simply touching the **+30 SEC** pad. You can also extend cooking time in multiples of 30 seconds by repeatedly touching the +30 SEC pad during manual cooking.

Note:

- To use **+30 SEC**, touch pad within 3 minutes after cooking, closing the drawer or touching the **STOP/CLEAR** pad.
- **+30 SEC** cannot be used with Sensor settings, REHEAT or DEFROST.

MULTIPLE SEQUENCE COOKING

Your Microwave Drawer can be programmed for up to 4 automatic cooking sequences, switching from one power level setting to another automatically.

Sometimes cooking directions tell you to start on one power level and then change to a different power level. Your Microwave Drawer can do this automatically.

1 First enter cooking time. Then touch **POWER LEVEL** pad once for 100% cooking or repeat touching **POWER LEVEL** pad for a lower power level.

2 Enter second cooking time. Repeat touching **POWER LEVEL** pad for desired level. You can follow this procedure up to 4 times. TOUCH START

3 Touch **START/+30 SEC** pad.

Note:

- If **POWER LEVEL** pad is touched once, HIGH will be displayed.
- If 100% is selected as the final sequence, it is not necessary to touch the **POWER LEVEL** pad.
- If you wish to know power level during cooking, simply touch the **POWER LEVEL** pad. As long as your finger is touching the **POWER LEVEL** pad, the power level will be displayed.
- Keep Warm can be programmed even if 4 cooking sequences have been set.

MORE OR LESS TIME ADJUSTMENT

Should you discover that you like any of the REHEAT or DEFROST settings slightly more done, touch the **POWER LEVEL** pad once after touching your selection. The display will show MORE .

For slightly less done, touch the **POWER LEVEL** pad twice after touching your selection. The display will show LESS .

EXTERIOR

The outside surface is precoated metal and plastic. Clean the outside with mild soap and water; rinse and dry with a soft cloth. Do not use any type of household or abrasive cleaner.

STAINLESS STEEL SURFACE

The exterior should be wiped often with a soft damp cloth and polished with a soft dry cloth to maintain its beauty. There are also a variety of products designed especially for cleaning and shining the stainless exterior of the oven. We recommend that the cleaner be applied to a soft cloth and then carefully used on the stainless exterior rather than sprayed directly on to it. Follow package directions carefully.

FRONT SIDE OF THE DRAWER

Wipe the window on both sides with a soft damp cloth to remove any spills or spatters. Metal parts will be easier to maintain if wiped frequently with a soft damp cloth. Avoid the use of spray and other harsh cleaners as they may stain, streak or dull the drawer surface.

TOUCH CONTROL PANEL

If desired, the touch pads may be deactivated before cleaning. See the Control Lock information on page 18 of this manual. Wipe the panel with a cloth dampened slightly with water only. Dry with a soft cloth. Do not scrub or use any sort of chemical cleaners. Close drawer and follow directions on page 18 for turning Control Lock off. Touch **STOP/CLEAR**.

INTERIOR

Before cleaning the the Microwave Drawer, touch and hold the Control Lock button for 3 seconds to lock the control pad and the automatic door mechanism. The drawer can be locked in either the open or closed position. The display will show LOCK ON. This will prevent the drawer from accidentally opening or closing during cleaning. After cleaning, touch and hold the Control Lock button for 3 seconds to turn the lock off. The display will show LOCK OFF.

Cleaning is easy because no heat is generated to the interior surfaces; therefore, there is no baking and setting of spills or spattering. To clean the interior surfaces, including drawer sealing surfaces, wipe with a soft damp cloth. DO NOT USE ABRASIVE OR HARSH CLEANERS OR SCOURING PADS. For heavier soil, use mild soap; wipe clean with a soft damp cloth. Do not use any chemical oven cleaners.

MICROWAVE DRAWER GUIDES

Remove the food crumbs from the Microwave Drawer guides. Wipe with a soft dry cloth in order to keep the Microwave Drawer opening and closing smoothly.

WAVEGUIDE COVER

ATTENTION **The waveguide cover, located on the inside top of the Microwave Drawer area, is made from mica, so it requires special care. Keep the waveguide cover clean to assure good microwave performance. Carefully wipe with a soft damp cloth any food spatters from the surface of the cover immediately after they occur. Built-up splashes may overheat and cause smoke or possibly catch fire. Do not remove the waveguide cover.**

ODOR REMOVAL

Occasionally, a cooking odor may remain in the Microwave Drawer. To remove odor, combine 1 cup water, grated peel and juice of one lemon and several whole cloves in a 2-cup glass microwave-safe measuring cup. Boil for several minutes using 100% power. Leave in the Microwave Drawer until water cools. Wipe interior with a soft cloth.

BEFORE YOU CALL FOR SERVICE

Please check the following before calling for service. It may save you time and expense.

	PROBLEM	POSSIBLE CAUSE	SOLUTION
1	Part or all of Microwave Drawer does not operate.	• Power cord of Microwave Drawer is not completely connected to the electrical outlet. • Power outage. • Fuse/circuit breaker at home doesn't work. • Microwave Drawer is in Demo Mode.	• Make sure the power cord is tightly connected to the outlet. • Check house lights to be sure. Call your local electric company for service. • Replace the fuse or reset the circuit breaker. • See page 17 for how to cancel Demo Mode.
2	Food in Microwave Drawer is not heated.	• No power to the appliance. • Drawer controls improperly set. • Drawer is in Demo Mode.	• See SOLUTION for PROBLEM 1. • Check if the controls have been properly set. • See page 17.
3	Microwave Drawer light does not work.	• Light bulb is loose or burned out.	• Call for service.
4	Touch controls will not operate.	• Control Lock is on.	• See page 18 to unlock.
5	Display flashes.	• Power failure.	• Touch Clear pad and reset the clock. If the Microwave Drawer was in use, you must reset the cooking function.
6	Steam from the vent	• During microwaving, steam may come from the right side of the vent.	

COOKBOOK INFORMATION

125 GREAT RECIPES

- **All about your microwave**
- **Color photos**
- **Step-by-step instructions**
- **Durable wipe-clean soft cover with 192 7" x 10" pages**
- **Helpful tips and special techniques**

MICROWAVE OVEN COOKBOOK

TO ORDER

Simply call this toll-free number: **1-800-237-4277**. Please have your credit card ready.

If you prefer to order by mail, complete and return the order form. Please include check or money order (payable to Sharp Electronics Corporation) for $14.00 plus $4.50 shipping & handling, per book.

SATISFACTION GUARANTEED

You must be completely satisfied with the Sharp Microwave Oven Cookbook. If, within 14 days, you are dissatisfied for any reason, simply return the book and we'll gladly refund your $14.00.

(SOLAMENTE ESCRITO EN INGLES!)

Cut along this line.

COOKBOOK ORDER FORM

Please send me _____ cookbooks at $18.50 each.

TOTAL ORDER AMOUNT **$** _____

☐ I have enclosed a check made payable to Sharp Electronics Corporation.

☐ Please bill my: ☐ VISA ☐ MASTERCARD ☐ AMERICAN EXPRESS

Acct. No. _____ Expiration date _____ / _____

Signature _____

(All credit card orders must be signed.)

Name _____

Address _____

City _____ State _____ Zip _____

Daytime Phone No. (_____) _____

Mail to: Sharp Electronics Corporation
Attention: Customer Assistance Center
Sharp Plaza Blvd.
Memphis, TN 38193

Price is subject to change without notice.

NOTES

MICROWAVE DRAWER

KEEP WARM

Micro Warm allows you to keep food warm up to 30 minutes.

Direct Use

1. Touch **KEEP WARM** pad. ENTER TIME UP TO 30 MINUTES
2. Enter desired time by touching the number pads. To enter 30 minutes, touch 3 0 0 0. 30:00 TOUCH START
3. Touch **START/+30 SEC** pad.

With Manual Cooking

1. Enter desired cooking time and power level.
2. Touch **KEEP WARM** pad.
3. Enter desired warming time up to 30 minutes.
4. Touch **START/+30 SEC** pad.

TIMER

1. Touch **TIMER/CLOCK** pad and number 1.
2. Enter time.
3. Touch **TIMER/CLOCK** pad again.

   To cancel timer, touch **STOP/CLEAR**.

OTHER FEATURES

CONTROL LOCK

The Control Lock prevents unwanted oven/drawer operation such as by small children. The Microwave Drawer can be set so that the control panel is deactivated or locked.

To Lock

Touch **STOP/CLEAR** pad and hold for 3 seconds. LOCK ON

To Unlock

Touch **STOP/CLEAR** pad and hold for 3 seconds. LOCK OFF

HELP/SETTINGS

Check operation manual for specific details.

Touch **HELP/SETTINGS** pad.
- **2** times for **Sound Off/On**.
- **3** times for **End of Cooking Reminder**.
- **4** times for **Auto Start**.
- **5** times for **Demonstration Mode**.
- **6** times for **Sleep Mode**.

AUTO-TOUCH GUIDE

For more complete information and safety precautions, refer to your Operation Manual.

MICROWAVE DRAWER

SET CLOCK

1 Touch **TIMER/CLOCK** pad and number 2.

2 Touch number pads for correct time of day and touch **TIMER/CLOCK** pad again.

If the electrical power supply to your range should be interrupted, the display will intermittently show:

ENJOY YOUR
MICRO- WAVE
TOUCH CLEAR
AND TOUCH
CLOCK

TIME COOKING

High Power Cooking

1 Enter cooking time by touching number pads. (Ex: 5 minutes)

5.00 TOUCH
START OR
TOUCH POWER
LEVEL

2 Touch **START/+30 SEC** pad.

Variable Power Cooking

1 After step 1 above, touch **POWER LEVEL** pad until desired power level is in the display.

2 Touch **START/+30 SEC** pad.

SENSOR

Sensor automatically computes the correct time and power level to cook foods on the Menu Label perfectly.

1 Touch **POTATOES** once.

SEE LABEL
SELECT FOOD
NUMBER

2 See Menu Label. Select desired food by touching number pad. Ex: Touch 1 for baked potatoes.

3 Touch **START/+30 SEC** pad.

+30 SEC

Touch **START/+30 SEC** for 30 seconds at 100% microwave power or to add 30 seconds during manual cooking. Continue to touch for additional 30 seconds.

BEVERAGES

Use this feature for coffee, tea or hot cereal to reheat.

1 Touch **BEVERAGES** pad.

SEE LABEL
SELECT FOOD
NUMBER

2 See Menu Label. Select desired food by touching the number pad. Ex: Touch 2 for hot water.

HOT WATER

3 Repeat touching same number pad to select quantity. Ex: touch 2 two more times for 2 cups.

2 CUPS

4 Touch **START/+30 SEC** pad.

DEFROST

Use this feature to defrost the foods shown on the Menu Label.

1 Touch **DEFROST** pad.

SEE LABEL
SELECT FOOD
NUMBER

2 See Menu Label. Select desired food by touching the number pad. Ex: Touch 2 for steaks/chops.

STEAKS CHOPS
ENTER WEIGHT

3 Enter weight by touching number pads.

1.0 Lb

4 Touch **START/+30 SEC** pad.

5 Microwave will stop to allow food to be turned over, shielded and/or removed. Close the Microwave Drawer. Touch **START/+30 SEC** pad.

MELT / SOFTEN

Use these features to melt or soften the foods shown on the Menu Label.

1 Touch **MELT/SOFTEN** pad once.

SEE LABEL
SELECT FOOD
NUMBER

2 See Menu Label. Select desired food by touching the number pad. Ex: Touch 2 for chocolate.

CHOCO- LATE

3 Repeat touching same number pad to select quantity. Ex: touch 2 two more times for 1 square.

4 Touch **START/+30 SEC** pad.

SHARP®

SHARP ELECTRONICS CORPORATION
1 Sharp Plaza, Suite 1
Mahwah, New Jersey 07495-1123

TINSEB538MRR0