Oven, 24″, 7 Function, Self-cleaning

Series 5 | Contemporary

Stainless Steel

With generous capacity and beautiful contemporary styling, this built-in oven will complement your kitchen design perfectly.

- Three cubic feet total capacity, with seven oven functions including Aero™ Pastry
- Self-cleaning function breaks down food residue for an easy clean
- Moisture control and even heat distribution thanks to ActiveVent™ and AeroTech technology
- Optional non-tip, full-extension sliding shelves for safe removal of hot dishes

DIMENSIONS

Height	**23 9/16″**
Width	**23 1/2″**
Depth	**22 1/4″**

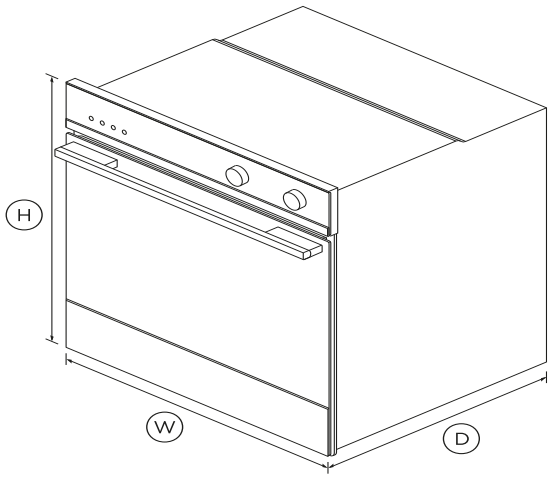

FEATURES & BENEFITS

Generous capacity
With a generous sized internal cavity, you can create several dishes at once using multiple shelves.

Perfect Results
Our built-in ovens feature ActiveVent technology for optimized moisture levels, and AeroTech™ for even heat distribution. Get perfect results even when you're using multiple shelves.

Multi-function flexibility
Seven functions including Aero™ Pastry, Aero™Bake and True Aero™ mean no matter what you're cooking, you've got the right heat to match.

Seamless fit
Designed to fit seamlessly in your kitchen, this built-in oven fits flush with cabinetry to minimize gaps and add to a cohesive aesthetic.

Cleaning is simple
<>

Refined styling
With sophisticated handle styling and stainless steel finish, our built-in ovens are designed to match the rest of Fisher & Paykel's kitchen appliance family.

Safe and sound
The CoolTouch door features triple glazing and a cooling system that ensures it's safe to touch from the outside – protecting both your hands and the surrounding cabinetry.

SPECIFICATIONS

Accessories

Food probe	**1**
Full extension telescopic	**•**
Grill pan	**1**
Meat probe	**1**
Optional Accessory round	**Part 81671**
Optional round handle	**Part 81645**
Step down wire shelf	**1**

Capacity

Shelf positions	**6**
Total capacity	**3cu ft**

Usable capacity	**2.5cu ft**

Cleaning

Acid resistant graphite enamel	•
Removable oven door	•
Removable oven door inner	•
Removable shelf runners	•
Self-clean	•

Controls

Audio feedback	•
Automatic cooking/minute	•
Automatic pre-set	•
Celsius/Fahrenheit	•
Electronic capacitive touch	•
Electronic clock	•
Electronic oven control	•
Precise electronic temperature	•
Sabbath mode	•
Soft close doors	•
Turned stainless dials with	•

Functions

Aero Bake	•
Aero Broil	•
Aero Pastry	•
Bake	•
Broil	•
Maxi Broil	•
Number of functions	**7**
Rapid proof	•
Roast	•
Self-clean function	•
True Aero	•
Vent bake	•
Warm	•

Performance

ActiveVent™ system	•
AeroTech™ technology	•
Automatic rapid pre-heat	•
Broil power	**3200W**
Whisper quiet cooking	•

Power requirements

Supply frequency	**60Hz**
Supply voltage	**208 - 240V**

Product dimensions

Depth	**22 1/4″**
Height	**23 9/16″**
Width	**23 1/2″**

Safety

Advanced cooling system	•
Balanced oven door	•
Catalytic venting system	•
Control panel key lock	•
Non-tip shelves	•

SKU	82258

The product dimensions and specifications in this page apply to the specific product and model. Under our policy of continuous improvement, these dimensions and specifications may change at any time. You should therefore check with Fisher & Paykel's Customer Care Centre to ensure this page correctly describes the model currently available. ? Fisher & Paykel Appliances Ltd 2020

Other product downloads available at fisherpaykel.com

- User Guide
- User Guide
- Installation Guide
- Data Sheet Oven

24/7

A PEACE OF MIND SALE

24 Hours 7 Days a Week Customer Support

T 1.888.936.7872 **W**www.fisherpaykel.com