ASKO

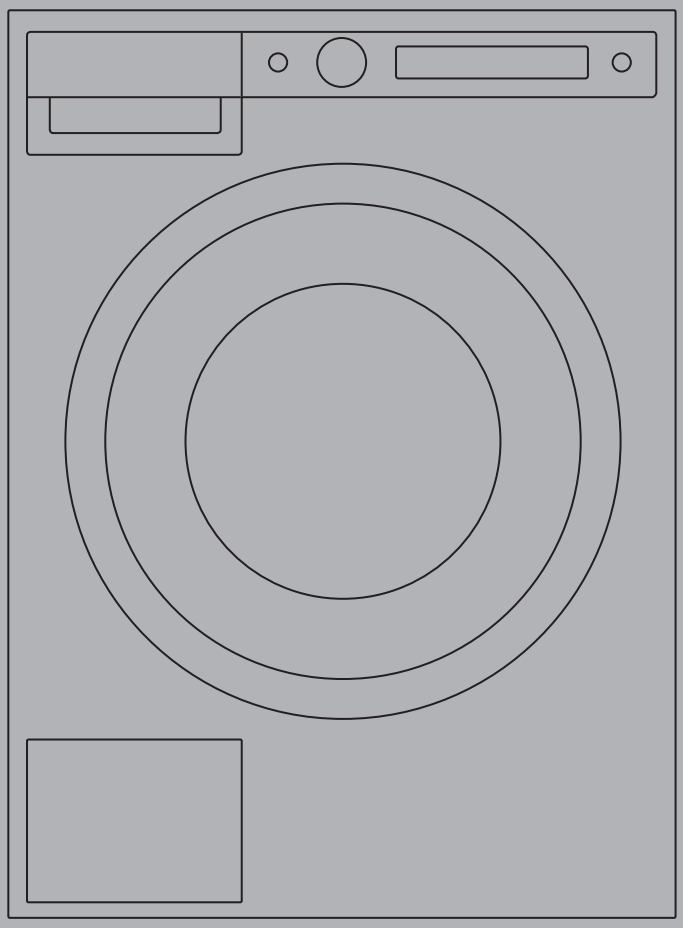

INSTRUCTIONS FOR USE

WM85.2

Washing machine
W6124X.W.U

Carefully read the instructions for use before using the washing machine.

Dear Customer,

We thank you for purchasing this quality ASKO product.

We hope it meets all your expectations. Scandinavian design combines pure lines, everyday functionality, and high quality. These are the key characteristics of all our products, and the reason why they are highly appreciated across the globe.

We kindly recommend that you read these instructions before using the appliance for the first time. The instruction manual also includes information on how you can help protect the environment.

TABLE OF CONTENTS

Important safety instructions	3	Cleaning and maintenance	44
Washing machine description	7	Errors and troubleshooting	49
Detergent compartment	7	Service	54
Before using the appliance for the first time	8	Service	56
Installation and connection	11	Program table	58
Tips before washing	19	Table: washing mode/temperature	60
Washing process	22	Table options	61
Settings	35	Disposal	62
Special features	39	Quick guide	63

The following symbols are used throughout the manual and they have the following meanings:

	Information, advice, tip, or recommendation		Warning – danger of hot surface
	Warning – general danger		Warning – danger of fire
	Warning – danger of electric shock		

Original instructions

See Quick guide on the last page.

IMPORTANT SAFETY INSTRUCTIONS

GENERAL

SAVE THESE INSTRUCTIONS FOR FUTURE REFERENCE!

⚠ To reduce the risk of fire, electric shock, or injury to persons when using your appliance, follow basic precautions, including the following:

1. Read all instructions before using the appliance.
2. Do not run appliance while you are out of the home.
3. **The appliance is intended exclusively for use in households.**
4. ⚠ WARNING! - Do not wash or dry articles that have been previously cleaned in, washed in, soaked in, or spotted with gasoline, dry-cleaning solvents, cooking oils, or other flammable or explosive substances because they give off vapors that could ignite or explode.
5. Use only detergents and softeners for machine wash. Manufacturer may not assume responsibility for any damage and eventual discolouring of gaskets and plastic components as a consequence of incorrect use of bleach and/or colouring agents.
6. ⚠ WARNING! - Never use detergents containing solvents, since there is a danger of creating toxic gasses which may damage the machine and result in ignition or explosion.
7. Do not allow children to play on or in the appliance. Close supervision of children is necessary when the appliance is used near children.
8. Before the appliance is removed from service or discarded, remove the door to the washing compartment.
9. Do not reach into the appliance if the drum is moving.
10. Do not install or store this appliance where it will be exposed to the weather.
11. Do not tamper with controls.
12. Do not repair or replace any part of the appliance or attempt any servicing unless specifically recommended in the user-repair instructions or in published user-repair instructions that you understand and have the skills to carry out.
13. Do not add gasoline, dry-cleaning solvents, or other flammable or explosive substances to the wash water. These substances give off vapors that could ignite or explode.
14. ⚠ WARNING! - Under certain conditions, hydrogen gas may be produced in a hot water system that has not been used for 2 weeks or more. HYDROGEN GAS IS EXPLOSIVE. If the hot water system has not been used for such a period, before using a washing machine or combination washer-dryer, turn on all water faucets and let the water flow from each for several minutes. This will release any accumulated hydrogen gas. As the gas is flammable, do not smoke or use an open flame during this time.

15. ⚠ WARNING! - This appliance must be properly grounded. This manual does not cover every possible condition and situation that may occur. Use common sense and caution when installing, operating, and maintaining any appliance.
16. ⚠ WARNING!
    PROPOSITION 65 FOR CALIFORNIA RESIDENTS
    Cancer and Reproductive Harm – www.P65Warnings.ca.gov
17. ⚠ WARNING!
    Certain internal parts are intentionally not grounded and may present a risk of electric shock only during servicing. Service Personnel - Do not contact the following parts while the appliance is energized: Motor, Pump and Control unit.

a) For a grounded, cord-connected appliance:

GROUNDING INSTRUCTIONS

This appliance must be grounded. In the event of malfunction or breakdown, grounding will reduce the risk of electric shock by providing a path of least resistance for electric current. This appliance is equipped with a cord having an equipment-grounding conductor and a grounding plug. The plug must be plugged into an appropriate outlet that is properly installed and grounded in accordance with all local codes and ordinances.

⚠ WARNING! - Improper connection of the equipment-grounding conductor can result in a risk of electric shock. Check with a qualified electrician or service representative or personnel if you are in doubt as to whether the appliance is properly grounded.

⚠ Do not modify the plug provided with the appliance.

⚠ If it will not fit the outlet, have a proper outlet installed by a qualified electrician.

b) For a grounded, permanently connected appliance:

GROUNDING INSTRUCTIONS

This appliance must be connected to a grounded metal, permanent wiring system, or an equipment-grounding conductor must be run with the circuit conductors and connected to the equipment-grounding terminal or lead on the appliance.

This manual does not cover every possible condition and situation that may occur. Use common sense and caution when installing, operating, and maintaining any appliance.

KIDSAFE™ CHILD SAFETY

⚠ WARNING! - **Keep an eye on children!**

- ⚠ Laundry detergents are corrosive, so always keep them out of reach of children.
- ⚠ Should a child swallow detergent, give plenty to drink immediately, i.e., one or two glasses of milk or water. Do not try to induce vomiting. Seek medical advice immediately: The National Poison center phone number is 1-800-222-1222.
- ⚠ Always close the door and start the appliance as soon as you put in the detergent.
- ⚠ Always turn the power off to the machine when it is not in use.
- ⚠ Always keep small children away from the machine when it is open. There may be some detergent residue left inside the machine.
- ⚠ If laundry detergent gets in someone's eyes, rinse them with plenty of water for at least 15 minutes.
- Do not allow small children to play with the washing machine.
- Before closing the washing machine door and running the program, make sure there is nothing except laundry in the drum (e.g. if a child climbed into the washing machine drum and closed the door from the inside).
- Keep the detergent and conditioner out of reach of children.
- **Activate the child lock.** See chapter "SETTINGS, section Child Lock".
- **Do not let children younger than three years to come near the appliance, unless they are under constant supervision.**
- The washing machine is made in compliance with all relevant safety standards. This washing machine may be used by children aged 8 years and above and by persons with reduced physical, sensory or mental capabilities or lack of experience and knowledge, but only if they are supervised during the use of the appliance, if they have been provided relevant instructions regarding safe use of the washing machine, and if they understand the hazards of inappropriate use. Make sure children do not play with the appliance. Make sure the children do not clean the washing machine or perform any maintenance tasks without supervision.

DANGER OF HOT SURFACE ⚠

- At higher washing temperatures, the door glass will heat up. Be careful to avoid burns. Make sure children do not play near the door glass.

WATER OVERFLOW PROTECTION ⚠

- If the water level in the appliance rises above the normal level, then the excessive water level protection will be activated. It will shut off the water supply and start pumping out the water. If the water level does not decrease in 60 seconds, the program will be interrupted (see chapter "ERRORS AND TROUBLESHOOTING").

TRANSPORTING / STORAGE DURING THE WINTER

If you transport or store the appliance in vehicles or rooms that are not heated and where the temperature could drop to below freezing point, please do the following:

- Clean the drain pump filter. See chapter "CLEANING AND MAINTENANCE".
- Close the water supply to the washing machine, undo the water supply hose from the water supply tap, and wait until the water flows out of the tap and the hose.
- After the drain pump filter is emptied, there can still be a small amount of water in the machine. This, however, does not affect the quality and will not damage the appliance.
- If the washing machine is to be transported, transport protection has to be re-installed before transport (See chapter BEFORE USING THE APPLIANCE FOR THE FIRST TIME).

SAVE THESE INSTRUCTIONS FOR FUTURE REFERENCE!

WASHING MACHINE DESCRIPTION

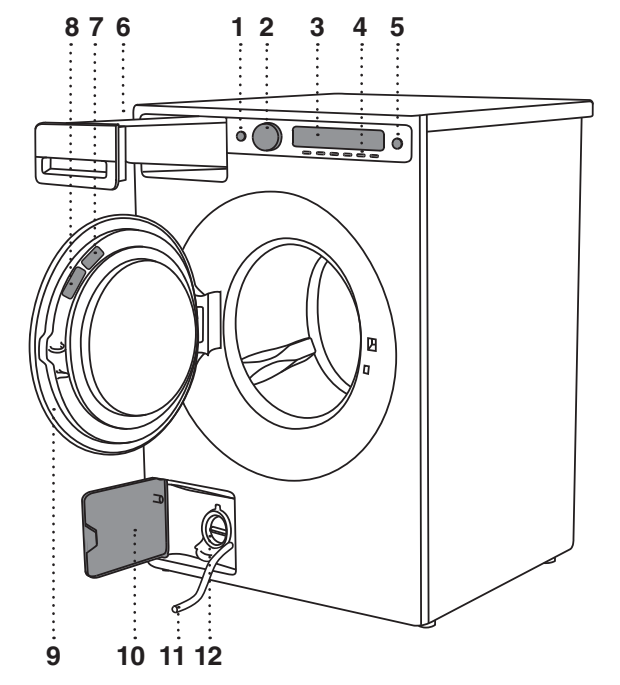

1. Main switch (ON/OFF)
2. Program selector knob
3. Display unit
4. Program settings buttons
5. Button (start/pause)
6. Detergent compartment
7. QR and AUID code (on the inside of the washing machine door)
8. Rating plate with information about the washing machine (on the inside of the washing machine door)
9. Washing machine door
10. Drain filter cover
11. Water release hose
12. Drain filter pump (installed behind the drain pump filter)

DETERGENT COMPARTMENT

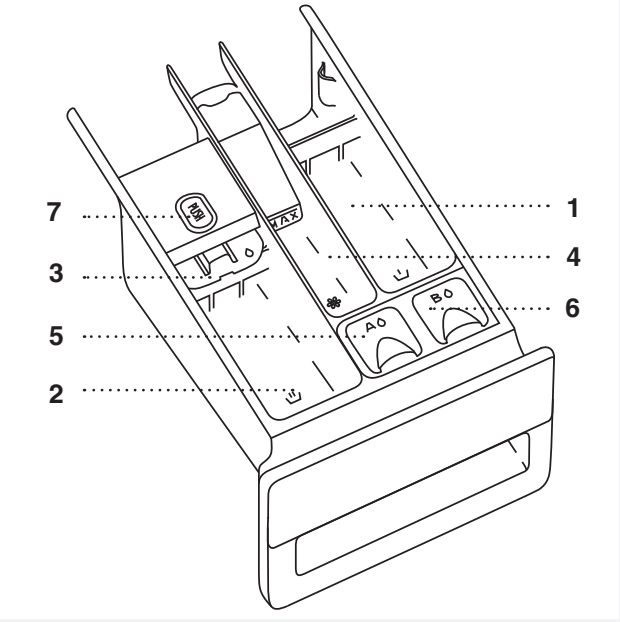

1. Prewash compartment
2. Compartment for main wash liquid detergent.
   Use the foldable barrier (3).
2. Compartment for main wash powder detergent.
   Do not use the foldable barrier (3).
4. Softener / conditioner compartment
5. Compartment (A) for liquid detergent for the Color program for the ADS.
   (ADS = **A**uto **D**ose **S**ystem);
6. Compartment (B) for liquid detergent for the Black / White / Sensitive / Other program for ADS
7. Tab for detergent compartment removal

The detergent drawer automatically dispenses the detergent and fabric softener at the appropriate times. Simply pour the measured amounts of detergent and softener into the proper compartments (as illustrated) and close the drawer.

To avoid oversudsing, do not put detergent in the prewash compartment unless you are using one of the Heavy wash programs which has a prewash cycle.

BEFORE USING THE APPLIANCE FOR THE FIRST TIME

PACKAGING

Remove all packaging.
Please sort the materials in compliance with local recommendations (see chapter ”DISPOSAL”).

TRANSPORT PROTECTION

Before using the appliance, remove the three transport bolts and plastic plugs which protect the appliance during transport.

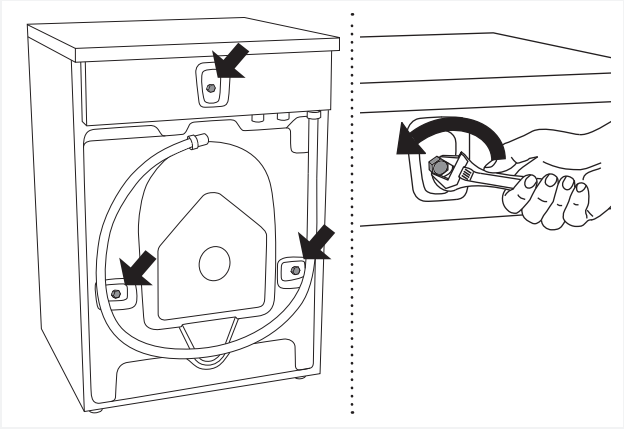

1 Release and remove the bolts as shown in the figures.

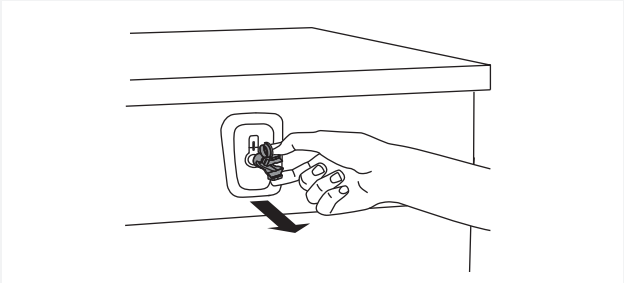

2 To remove the plastic plugs holding the bolts, squeeze them and then pull them out.

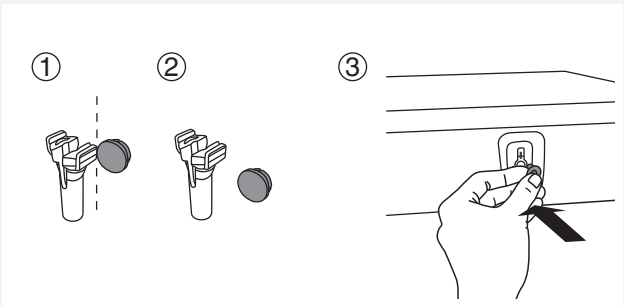

3 Remove the caps from the plastic plugs. Push the caps over the three holes in which the plastic plugs were inserted. Save the bolts and plastic plugs if you have to transport your washing machine in the future.

If you wish to transport the washing machine, reinstall the bolts and plastic caps to lock the machine. This will prevent any damage to the machine due to vibrations during transport. If you have lost the transport bolts or plastic caps, replacements can be ordered at your dealer.

Art. No.	ID:
270698	Bolt
551188	Plastic cap (transport lock)

Please order three pieces of each item!

CLEANING

Disconnect the washing machine from the power mains and open the door. Clean the washing machine drum with a damp cloth and a mild detergent.

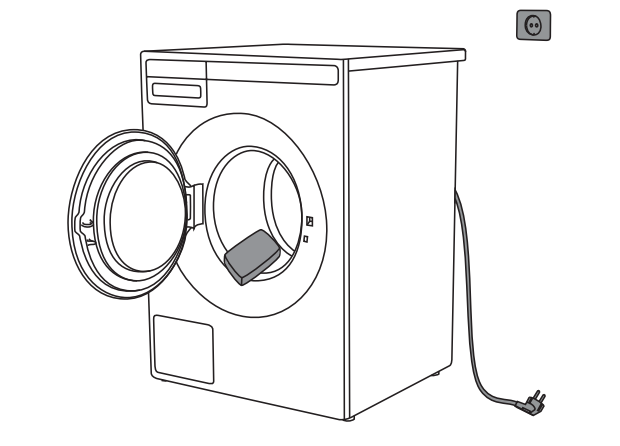

Connect the washing machine to the power mains and run the dedicated drum cleaning program. See chapter "WASHING PROCESS" /STEP 5: CHOOSE THE PROGRAM.

No program can be started while the door is open.

SETTINGS BEFORE FIRST USE

After connecting the washing machine and power it for the first time, you will be asked to do following settings:

1. **Language selection**
   Use the Program selector knob or buttons to scroll the list of languages.
   Confirm the selection by pressing the "Set" button.
2. **Water hardness**
   The following water hardness settings are available: soft / normal / hard.

   How to use the test strip:
   1. Turn on the water tap and let the water run for a minute or so.
   2. Fill a glass with cold water.
   3. Remove the test strip from its packaging.
   4. Dip the test strip in the water for about one second.
   5. Wait one minute. Now compare the colours of the squares with the water hardness table.

Test strip	°dH	°fH
4 green □□□□	< 3	< 5
1 red ■□□□	> 4	> 7
2 red ■■□□	> 7	> 12
3 red ■■■□	> 14	> 25
4 red ■■■■	> 21	> 37

   Table for water hardness; See chapter "SETTINGS/WATER HARDNESS".
   Confirm your selection with the button under the selected water hardness.

Press the "Next" button to confirm your selection.
For further washing process, see chapter "WASHING PROCESS".

The amount of detergent also depends on the hardness of water. For details, see the detergent packaging. Please contact your local water supply company to check the water hardness in your area.

In models with ADS the amount of detergent dispensed also depends on the water hardness setting.

Before using the AD system for the first time, run one of the programs (without any laundry), after filling the A or B tank with liquid detergent (see chapter ”SPECIAL FEATURES”).

Before the product is dispatched from the factory, every appliance is tested.
As a result, there may be some residual water left in the drain pump filter. This, however, does not affect the quality and will not damage the appliance.

INSTALLATION AND CONNECTION

POSITIONING THE WASHING MACHINE

Read these instructions carefully and completely before you install the machine. The installation should be carried out by a qualified person who is familiar with all local codes and ordinances for electrical and plumbing connections.
Cosmetic damage must be reported to your dealer within five days from the date of purchase. After unpacking the washer, thoroughly check the unit for cosmetic damage.

The washing machine can be installed as a built-in (integrated) or a freestanding unit. Place the machine on a level surface so that the power outlet on the wall is accessible.

Before connecting the washing machine to the power mains, wait for at least 2 hours until it reaches room temperature.

Grounding instructions
This appliance must be grounded. In the event of malfunction or breakdown, grounding will reduce the risk of electric shock by providing a path of least resistance for electric current. This appliance is equipped with a cord having an equipment-grounding conductor and a grounding plug. The plug must be plugged into an appropriate outlet that is properly installed and grounded in accordance with all local codes and ordinances.

Freestanding installation
The washer can be placed next to the dryer. It is essential that the machine is leveled and the locknuts are tightened to prevent excessive vibration during spin cycles. Also be sure to leave a minimum of ½" of space between the washer and the dryer. The height adjustment for the washer is 35½" to 37½" (900 mm to 950 mm). Do not raise it higher than 34½" (876 mm).

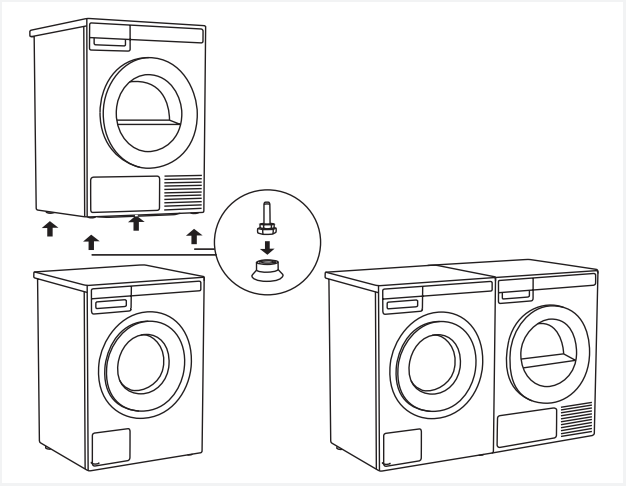

Improper connection of the equipment-grounding conductor can result in a risk of electric shock. Check with a qualified electrician or servicer if you are in doubt as to whether the appliance is properly grounded.
Do not modify the plug provided with the appliance. If it will not fit the outlet, have a proper outlet installed by a qualified electrician.

Clearances around the washing machine

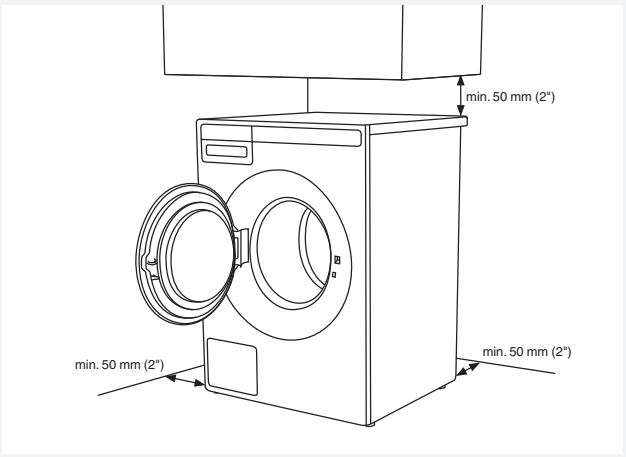

Opening the washing machine door (top view)

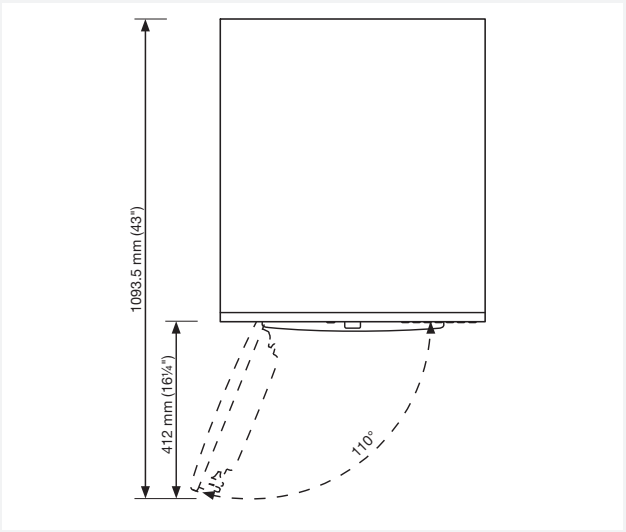

Stacked installation
ASKO washers should never be stacked on a counter or a dryer. You can, however, stack an ASKO dryer on an ASKO washer. Refer to your Dryer Use and Care Guide for instructions on how to do this.

Stacking an ASKO dryer on top of an ASKO washing machine
To stack an ASKO dryer on top of a washing machine, use the extra vacuum feet and the tipping guard (A+B), supplied in the cardboard box in the

ASKO dryer drum. If the washing machine and dryer are not of matching dimensions or if you have installed a hidden helper between the two appliances, then binding plates are available as optional accessories at the service unit.

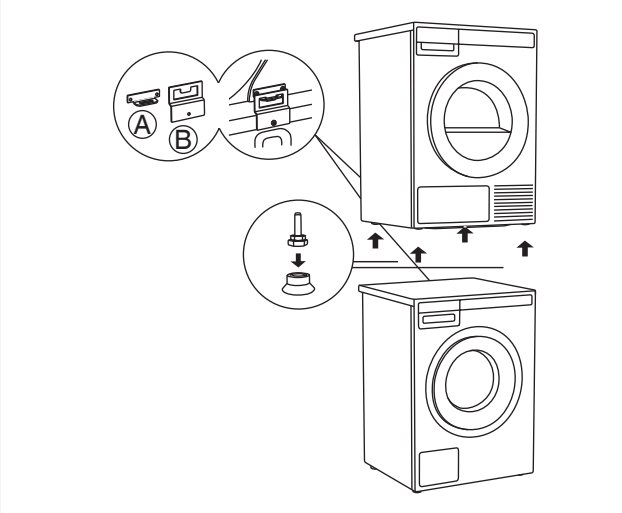

Built-in installation
ASKO washers can be installed beneath a cabinet or worktop with a height of 34” to 35” (863 to 889 mm) or in a closet. There must be a gap of about ½” (12 mm) all around the machine, including between the rear edge of the machine’s top panel and the back wall. The opening width must be at least 24½” (622 mm). Space must also be available for the fill and drain hoses. See the illustration below for measurements and positions.

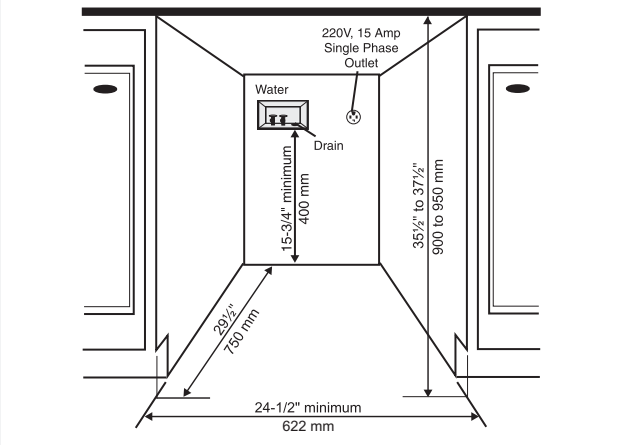

If the drain outlet is higher than 24"(610 mm), the connections will need to be recessed.

ADJUSTING THE FEET

Place the washing machine so that it is stable.
It is important that the machine is level to prevent excessive vibrations during spin cycles. Each foot of the washer is adjustable, so you can level the washer on any surface. Once it is level, securely tighten the lock nuts on the feet to prevent excessive vibration during spin cycles.

1. Level the washing machine horizontally and vertically by rotating the adjustable feet (using a No. 32 (1.26") spanner).
   The feet allow levelling by +/- 1 cm (0.39").
2. When the appropriate height of feet is set, use the wrench No. 17 (0.67") to firmly fasten the counter-nuts towards the bottom of the appliance ⬆.
3. Tighten the jam nuts (counter nuts) to the end position.
   This will reduce washing machine noise, vibration, movement etc. to minimum.

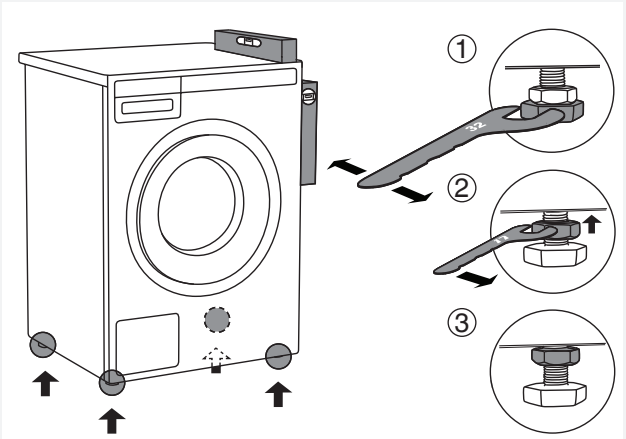

MOVING THE WASHING MACHINE AND TRANSPORT AFTER INSTALLATION

If you are moving the washing machine without packaging, open the washing machine door and pull the appliance by holding the washing assembly, as indicated in the figure.

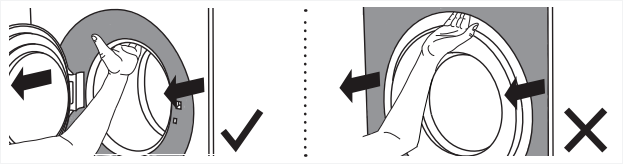

For any further moving of the appliance, use the transport rods (the washing machine drum has to be blocked).
(See chapter TRANSPORT PROTECTION.)

CONNECTING TO WATER SUPPLY

The machine has to be connected to water supply by an adequately trained person.

Since ASKO washers have a built-in heating element, you only need a cold water inlet. The connection should be made by someone who is sufficiently skilled. Use the hose supplied with the washer. (The inlet hose is marked for correct connection.) The water pressure must be in the range 15–146 PSI. A valve should be fitted on the water supply pipe. If a new supply pipe has been installed for the washer, it should be flushed thoroughly to remove any foreign particles that might clog the filter in the fill valve.

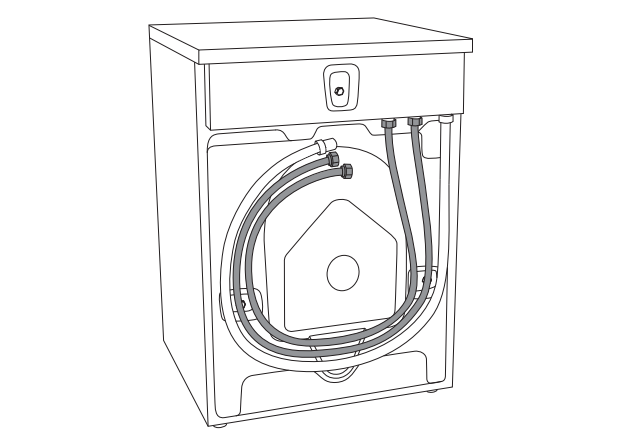

The water intake hose has to be fastened firmly enough for the hose to have a good seal.
After connecting the hose, the seal must be checked for any leaks.

Only use the water supply hose supplied with the appliance. Do not use any used or other hoses.

If the unit is installed on a second story, follow local building codes. We recommend installing a drip pan.

CONNECTING TO HOT/COLD WATER SUPPLY

(Only available in some models)
If your appliance has connections for both hot and cold water, then connect one hose to the cold water connection and the other hose to the hot water connection, as indicated on the back of the appliance:
COLD = cold and HOT = hot.
Hot water is supplied for programs operating at WARM or more.

Connecting to both hot and cold water will save time and electric energy when washing.

If your washing machine model has connections for both hot and cold water, and you only wish to connect cold water, then the protective cap has to be attached to the hot water connection.

Hot water connection

(Depending on model)
A few seconds after you start a program, the washing machine will begin to fill with water from the hot and cold supplies. If for some reason no hot water is available, the machine waits for one minute and then fills with cold water only. The wash drum does not start to rotate until it begins to fill with water.
Read these instructions carefully and completely before you install the machine. The installation should be carried out by a qualified person who is familiar with all local codes and ordinances for electrical and plumbing connections.
Cosmetic damage must be reported to your dealer within five days from the date of purchase. After unpacking the washer, thoroughly check the unit for cosmetic damage.

INSTALLING THE DRAIN HOSE

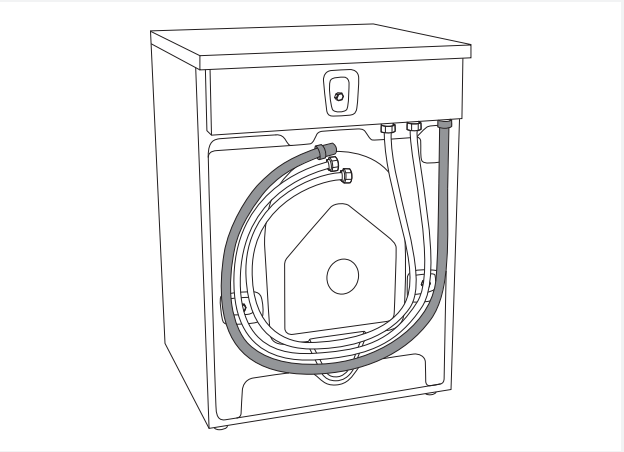

The machine is supplied with the outlet hose already attached. The hose should be extended over a suitable sink edge or drain pipe at a height of 24" to 36" (610 mm to 914 mm) above the bottom of the unit. (The lower height is preferable.) Make sure the hose is not kinked.

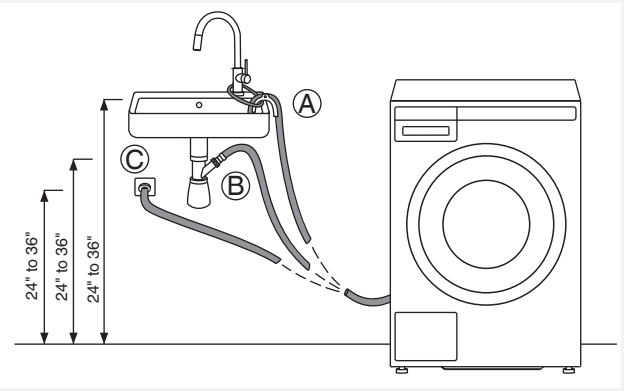

Drain hose can also be connected directly to the washbasin drain via a siphon. In this case, the hose, too, should be 24" to 36" (610 mm to 914 mm) above the floor. Internal hose diameter should be at least 0.71" (18 mm).
See figure.

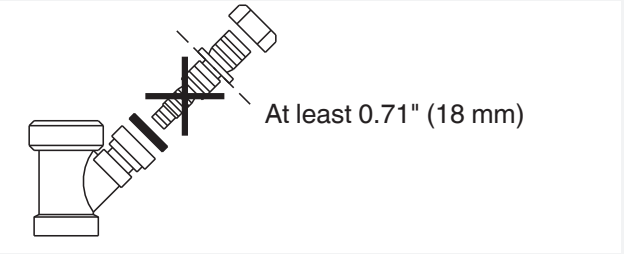

If the hose is extended, the internal diameter of the coupling must not be less than ½" (12.2 mm).

⚠ Do not extend the drain hose higher than 36" (914 mm) from the bottom of the unit.

CONNECTING TO THE POWER MAINS

⚠ After installation, the washing machine should stand still for two hours before it is connected to the power mains.

Connect the appliance to a grounded power outlet. After installation, the wall outlet should be freely accessible. The outlet should be fitted with a grounded contact (in compliance with the relevant regulations).

Electrical Connections

The machine is delivered ready-fitted with a plug and is intended for connection to an ASKO Dryer, which is equipped with a matching receptacle. The plug supplied with the washer can only be used with an ASKO Dryer. If the washer is used separately or with another dryer, it must be on a separate 208-240 V single-phase circuit.
If the machine is to be used in a wet area, the supply must be protected by a residual current device.
As supplied: 208-240 V, 60 Hz, 2000W heating element, 15A fuse required.

⚠ Connection to a permanently wired supply point must be made only by a qualified electrician.

Connection upon delivery

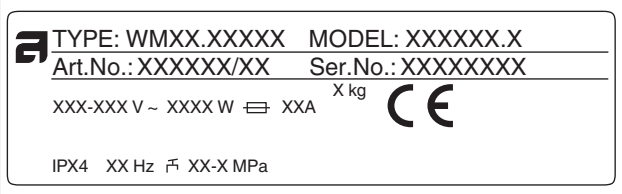

Information about your washing machine is indicated on the rating (type) plate.
Use the type A differential current protection switch.

We recommend using over-voltage protection to protect the appliance in case of a lightning strike.

The washing machine may not be connected to the power mains using an extension cord.

Do not connect the washing machine to an electrical outlet intended for an electric shaver or hair dryer.

Any repair and maintenance pertaining to safety or performance should be done by trained experts.

To reduce the risk of fire, electric shock, or injury to persons, read the chapter "IMPORTANT SAFETY INSTRUCTIONS" before operating this appliance.

ASKO LAUNDRY CARE - HIDDEN HELPERS*

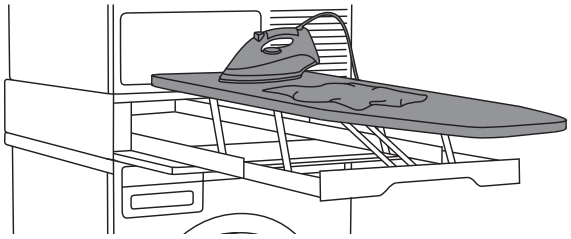

Laundry care ironing board
The ironing board is a clever solution. It is always handy when you need to iron your clothes, and it can be easily, safely and invisibly stored away when not in use.
It can be installed between your washer and dryer, or on top of one of them.

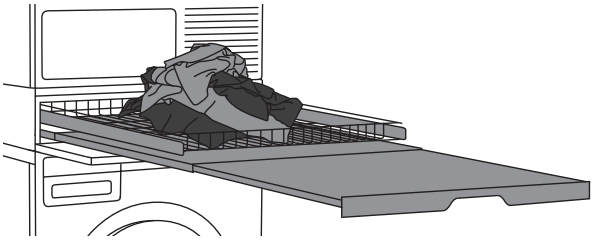

Laundry care double
A wire basket and pull-out shelf. It can be used as an additional surface for folding clothes, sorting socks and for storage. The basket is useful for removing and carrying laundry to the wardrobe or workbench for ironing and folding.
It can be installed between your washer and dryer, or on top of one of them.

Laundry care single
Pull-out shelf. It can be used as an additional surface when folding clothes and sorting socks or for storage. It also makes loading and unloading your laundry much easier.
It can be installed between your washer and dryer.

Laundry care basket
A large pull-out basket that is easily accessible via a push-pull door opening. Useful for removing laundry and carrying it to the wardrobe or workbench for ironing and folding.
It can be installed between your washer and dryer, or on top of one of them.

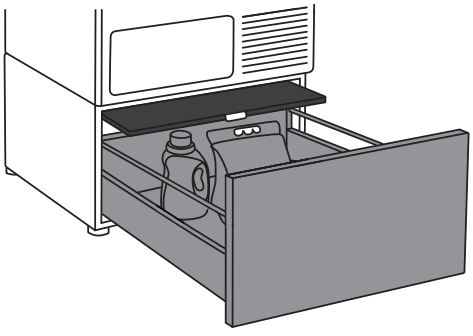

Pedestal drawer with shelf
A useful storage drawer with a height of 11.8" (30 cm). Ideal for storing your detergent, softener, coat hangers, pegs, user manuals and other useful items in the laundry area. The drawer also comes with a shelf for easy loading and unloading of your laundry.

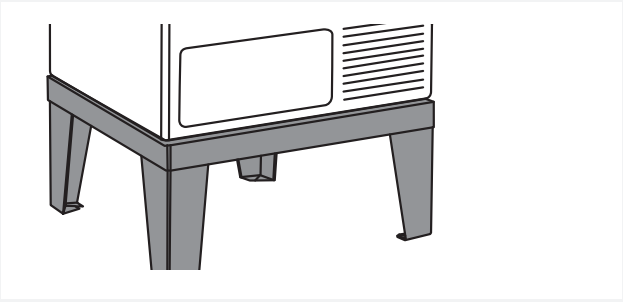

Laundry care plinth

Thanks to the stainless steel plinth, your appliance will be raised by 11.8" (30 cm), which makes loading and unloading of laundry easier.

*AVAILABILITY DEPENDING ON MARKET

DENOMINATION	ART. No.
IRONING BOARD HI1153 White	576552
IRONING BOARD HI1153 Stainless steel	732756
IRONING BOARD HI1153 Titanium	576553
LAUNDRY CARE DOUBLE HDB1153 White	576554
LAUNDRY CARE DOUBLE HDB1153 Stainless steel	732757
LAUNDRY CARE DOUBLE HDB1153 Titanium	576555
LAUNDRY CARE SINGLE HSS1053 White	576730
LAUNDRY CARE SINGLE HSS1053 Titanium	576732
LAUNDRY CARE HB1153 White	576733
PEDESTAL DRAWER W. SHELF HPS5323 White (only 8 kg (17.6 lbs) or 9 kg (19.8 lbs) models)	576735
PEDESTAL DRAWER W. SHELF HPS5323 Stainless steel (only 8 kg (17.6 lbs) or 9 kg (19.8 lbs) models)	576737
STAINLESS STEEL PLINTH HPL530S for 8 kg (17.6 lbs) and 9 kg (19.8 lbs) models	441663
STAINLESS STEEL PLINTH HPL830S for 11 kg (24.3 lbs) and 12 kg (26.5 lbs) models	445501

TIPS BEFORE WASHING

This chapter includes several tips on how to prepare the laundry for washing.

LAUNDRY SORTING

Sort the laundry according to:

- how soiled it is,
- colour,
- material.

CLOTHING

1. Close the zips and hook-and-loop fasteners so that they do not damage the fabric.
2. New dyed items may contain excess dye; therefore, they have to be washed separately several times.
3. Turn delicate items inside out. This will decrease the risk of tear and colour fading.
4. Place very sensitive clothes and small items in a special-purpose laundry washing bag.
5. Empty the pockets and turn them inside out.

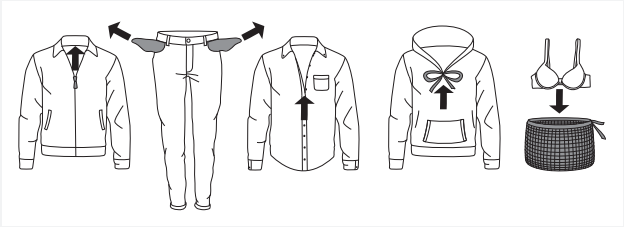

LAUNDRY SYMBOLS

Observe the laundry symbols.

Wash cycle	
	Normal wash cycle
	Permanent Press or Wrinkle Resistant setting
	Gentle/Delicate setting
	Hand wash only
	Do not wash
	Do not wring. Hang dry, drip dry, or dry flat

Wash water temperature	
	Maximum water temp 194° F/90° C (EXTRA HOT)
	Maximum water temp 160° F/70° C (EXTRA HOT)
	Maximum water temp 140° F/60° C (HOT)
	Maximum water temp 120° F/50° C (HOT)
	Maximum water temp 105° F/40° C (WARM)
	Maximum water temp 85° F/30° C (WARM)

Bleach instructions	
	Any bleach when needed
	Only non-chlorine bleach
	Do not bleach

Dry clean symbol	
	Dry clean only

Tumble dry cycle	
	Machine dry
	Normal setting
	Permanent Press or Wrinkle Resistant setting
	Gentle or Delicate setting
	Do not tumble dry

Tumble dry heat setting	
	Any heat
	High heat
	Medium heat
	Low heat
	No heat/Air fluff

Special drying instructions	
	Line dry or hang to dry
	Drip dry (do not spin or wring)
	Dry flat
	Dry in shade

Ironing instructions	
	Ironing is necessary
	High temperature setting
	Medium temperature setting
	Low temperature setting
	Do not iron or press with heat
	Iron without steam

COLOURED COTTON

Colored cotton items labeled (140 °F / 60 °C) (HOT) should be washed at HOT the first time in order to remove any excess dye. If you do not do so, there is a risk that the color will run. Use detergent without bleach in order to preserve the color of the fabric.

UNBLEACHED LINEN

Unbleached linen fabrics should be washed at HOT, using detergent containing no bleach or optical whiteners. Heavily-soiled linen can occasionally be washed at higher temperatures, but not too often as the heat can destroy the linen's sheen and strength.

WOOL

These fabrics are intended for either machine or hand wash. The Wool/Hand Wash program is equally gentle or even gentler than an actual hand wash.
Wool in particular is sensitive to washing and similar procedures.
If you do not wish to spin your clothes, select a setting without spinning (see "STEP 6: Choose the program settings /button 3"). However, most garments are suitable for at least a **short spinning cycle**. Top spinning speed available is MAX rpm.

VISCOSE AND SYNTHETIC FIBRES

Materials made of viscose and some synthetic fibres are highly sensitive, and require a lot of space in order not to crease. When washing, **only fill the drum to a half** and choose a program with spinning speed of no more than MAX rpm.

Viscose and acetates are fragile when wet.

REDUCING ALLERGIC REACTIONS

(Only in some models)
The options include washing with the Allergy Program Cotton and Allergy Program Synthetics, using the Allergy Mode program setting, or using an extra rinse (Super Rinse). These programs, program settings, and functions **can be used for people with sensitive skin**, such as those suffering from allergies, or small children.

SAVING TIME AND ENERGY

To save time and energy, use the Everyday Wash. This program has **shorter main wash** cycle than Standard Cotton and often suffices for less soiled laundry.

ECONOMY AND EFFICIENCY

You can save a lot of energy by not using the programs operating at higher temperatures.
Choose the Quick program if you wish to only refresh the laundry; or use the Time program. **This will save water and power.**
Selecting the maximum spinning speed will **reduce power consumption** if you dry the clothes in a dryer or a drying cabinet.
When using the programs Heavy, Everyday Wash and Standard Cotton, we recommend washing a full load.
Avoid prewash. Modern washing machines and detergents are efficient without the prewash as well. **Prewash is only necessary for heavily soiled laundry.** Use the additional function Prewash (see "STEP 6: Program Settings Menu – choosing extra functions / button 5").

DETERGENTS

Detergents carrying the environment protection label are less harmful to the environment.
Only add the detergents in compliance with the recommendations by detergent manufacturers.
Recommended amount of washing detergent at certain loads and water hardness levels are specified on the detergent packaging.

STAINS

If your clothes are soiled with stubborn stains (blood, eggs, coffee, grass etc.), they should be appropriately treated before the wash. Then, wash your laundry using the special programs (if your washing machine has them).
Do not use any chemical substances or agents; only use the stain removing detergents.

DYEING FABRICS

If you wish to dye fabrics in the washing machine, choose the Everyday Wash program with the Super Rinse extra function. **Choose the temperature according to the dye manufacturer's recommendations.** If you dye mixed fabrics, such as polyester/cotton, choose a low spinning speed.

Add the dye directly into the drum, rather than in the detergent compartment. After dyeing use the Drum Cleaning program (self-cleaning program). Use the standard amount of detergent.

When using bleaches or stain removal agents, there is danger of corrosion and discolouration.

⚠ To protect the environment, we advise against using powerful chemicals.

WASHING PROCESS

⚠ WARNING! - To reduce the risk of electric shock or injury to persons, read the "IMPORTANT SAFETY INSTRUCTIONS" section before operating this appliance.

STEP 1: SORT THE LAUNDRY

See chapter "TIPS BEFORE WASHING"

Use a washing net for underwire bras. Empty the pockets. Coins, nails etc. could damage the machine and the fabric.

STEP 2: TURN ON THE MAIN SWITCH.

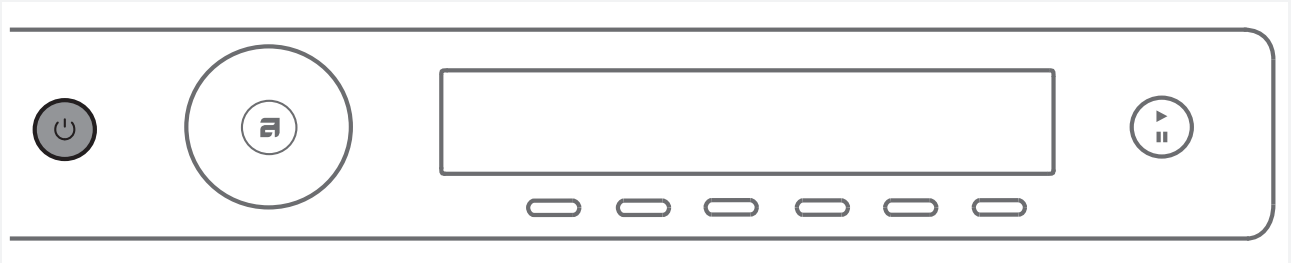

Turning on
Press the ⏻ on/off button.

Turning off
Press the ⏻ on/off button.

If the machine does not accept the on/off command correctly, wait for at least 8 seconds before pressing any other button.

STEP 3: OPEN THE WASHING MACHINE DOOR AND INSERT THE LAUNDRY.

Open the washing machine door by pulling the handle towards you.

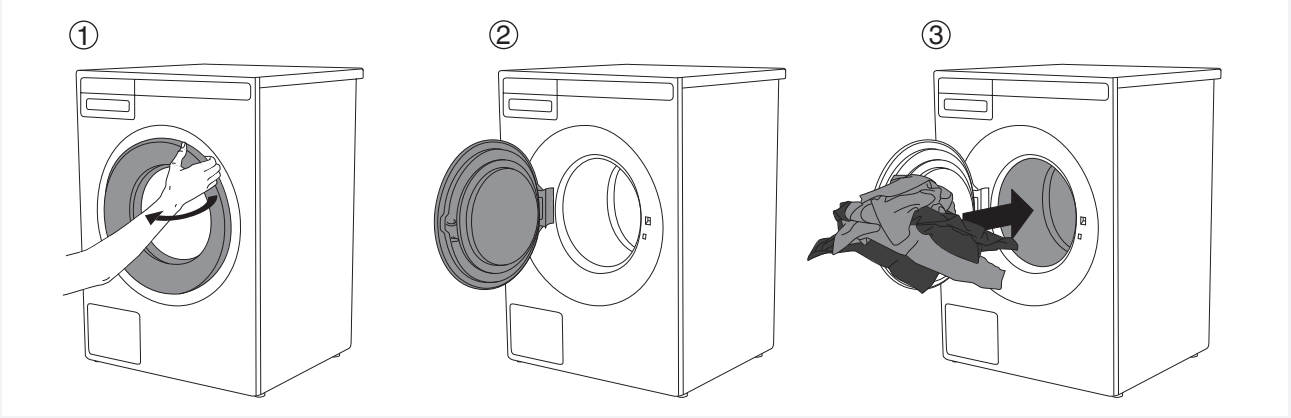

Place the laundry into the washing machine drum.
Before doing so, make sure the drum is empty.

Do not overload the drum!
If the washing machine drum is too full, the laundry will not be washed as thoroughly.

STEP 4: ADD THE DETERGENT AND THE CONDITIONER.

Recommended amount of detergent is usually specified on the detergent packaging. When washing a smaller amount of laundry, the amount of detergent used can be decreased.
Observe manufacturers' recommendations regarding the type of detergent suitable for certain temperatures, load size, and water hardness.
When using the ADS (**A**uto **D**ose **S**ystem), the appliance will automatically add the liquid detergent depending on the amount of laundry and the other selected settings.

Liquid detergents

We don't recommend liquid detergents because they tend to produce more suds than powder detergents when used in water temperatures of (150 °F) HOT or higher.
If you should try a liquid detergent, start with a very small amount, such as 1 to 2 tablespoons. Also, liquid detergent can be used for all programs without prewash, so add it into the main wash compartment.

Liquid detergent in ADS

The washing machine will automatically add the amount of liquid detergent according to the amount of your laundry and depending on how heavily soiled it is. Before adding the liquid detergent, pull out the dosing container as far as it will go.
Compartment (A) for liquid detergent for the Colour program.
Compartment (B) for liquid detergent for the Black / White / Sensitive / Other program.
See chapter "SPECIAL FEATURES".
In case of excessive foaming, check the water hardness settings (see chapter "SETTINGS"), how heavily soiled the laundry is, and the setting for the amount of liquid detergent according to the manufacturer's recommendations (see chapters "TIPS BEFORE WASHING").
ADS operation has been tested with liquid detergents by the leading global manufactures.
Use of other non-homogenized or homemade liquid detergents can cause malfunction of the ADS.
Any servicing required due to such problems shall not be covered by the warranty.

The washing machine must be switched on before you add the detergent!

Detergents

Laundry detergents are available in low-,
normal- and high-sudsing formulas. A detergent´s ability to clean is not relative to the amount of suds it produces. Excess suds in a front-loading washer actually interfere with the cleaning because they cushion the tumbling action. Also, high-sudsing detergents are more difficult to completely rinse out. The use of anything other than a low-sudsing detergent can cause severe oversudsing, which could cause suds to back up through the detergent compartment and run down the front of the washer onto the floor. If oversudsing occurs, run the wash through one or more rinse programs until all items are thoroughly rinsed. Remove the laundry then run the washer through a Normal wash program to get rid of any remaining detergent.
We recommend that you don't use bleach in your ASKO washer. The tumbling wash action, temperature control options, extended wash times and proper amount of detergent are sufficient to remove most stains.

Recommended powder detergents

ASKO washers use 50% to 75% less detergent than most other washers. This is because of their low water consumption and the fact that all the wash water is repeatedly circulated through the laundry, ensuring that all the detergent is fully utilized. We recommend that you use powder detergents made specifically for front-loading washers. These are sometimes called HE (High-Efficiency) detergents. Please visit our homepage www.askona.com to see the powder detergents we recommend for ASKO washers.
We recommend that you do not use any powder detergent that doesn't wash completely out of the detergent drawer.

We recommend adding the powder detergent immediately before the washing cycle. Otherwise, make sure the detergent compartment in the detergent compartment is completely dry before adding the powder detergent, as otherwise, the powder detergent may cake before the start of the washing process.

Detergent Amounts Based on Water Hardness

The amount of detergent needed can vary due to differences in water hardness. To determine the water hardness in your area, contact your local water utility or area water softening company. The harder the water, the more detergent you may need. Refer to the chart below for the recommended detergent amounts based on water hardness. Remember, you should adjust the amount of detergent you use by small amounts until you find the correct amount.
Note that 12 grains and higher is extremely hard water and detergent alone may not be enough. You may need to use a water softener to maximize the performance of your washer. Also, in areas with hard water (9+) you may need to wash at lower temperatures to prevent hard water deposits from forming in the tank and wash system.

Amount of detergent to use

The amount of detergent needed varies among the different brands, but for most detergents, you need only one or two tablespoons. Using too much detergent can result in detergent residue being left in your clothes, which can cause them to appear gray or dingy. You should start with a small amount of detergent and increase it only if the cleaning results are unsatisfactory.
Additionally, you should never put detergent in the prewash compartment unless you are using a wash program that has a prewash cycle. This could cause excess foaming, which could damage the machine.
The amount of detergent needed can also depend on the hardness of the water in your area. See the “Detergent Amounts Based on Water Hardness” section on the next page for more details.

Recommended detergent amounts based on water hardness

Detergent amounts		
Water hardness	**Pre Wash**	**Main Wash**
Soft (0-3 grains per gal.)	1 teaspoon	1 to 1-1/2 tablespoons
Medium (4-8 grains per gal.)	1 teaspoon	1 to 2 tablespoons
Hard (9+ grains per gal.)	1 teaspoon	2 to 3 tablespoons

Laundry ball or washing bag

If you are using a laundry ball or a washing bag, place it directly into the drum and choose a program without any prewash.

An excessive amount of detergent will not improve washing results. Rather, it will lead to foaming and increase the environmental impact. We recommend using less detergent. Only increase the dosage if you are not satisfied with the washing results.

Fabric softener

Pour the conditioner into the detergent compartment, into the compartment with the symbol ❀. Observe the recommendation on the conditioner packaging.

Do not fill the conditioner compartment over the max. indication (maximum indicated level). Otherwise, the conditioner will be added to the washing machine drum too soon, leading to poorer washing effect.

STEP 5: CHOOSE THE PROGRAM.

Choose the program by rotating Program selector knob in either direction. Confirm the program selection by pressing the button under the program.

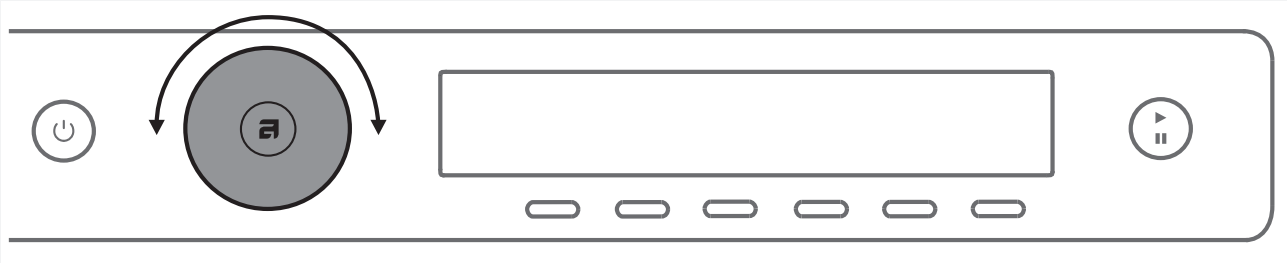

Choose the program depending on the type of laundry and how heavily soiled it is (see chapter "TIPS BEFORE WASHING").

Estimated program duration will appear on the display.

Extra program settings can also be selected for each program.
See STEP 6.

Choose between the following programs:

Program		Description
1.	**EVERYDAY WASH**	Program for lightly to moderately dirty laundry. The temperature can be set separately; therefore, observe the instructions indicated on the clothing. Wash the clothes worn directly on the skin at HOT. Less heavily soiled laundry will be thoroughly cleaned at WARM. Spinning speed can also be freely selected. Default setting is maximum spinning speed. Program duration and amount of water will be adjusted to the amount of laundry.
2.	**STANDARD COTTON**	Program for normally or heavily soiled laundry, white or coloured. The temperature can be set separately; therefore, observe the instructions indicated on the clothing worn directly on the skin. Choose WARM if the laundry is only lightly dirty. Spinning speed can be set to your preference. Default setting is maximum spinning speed. Program duration and amount of water will be adjusted to the amount of laundry.
3.	**MIX/SYNTHETICS**	Program for delicate clothing made of synthetic and mixed fibres or viscose, and for simple care of cotton. The highest available temperature is HOT. Observe the instructions indicated on the clothing. Most synthetic fabrics will be washed at WARM. Clothing worn directly on the skin should be washed at HOT. Maximum spinning can be decreased if necessary.
4.	**WOOL/HAND WASH**	Gentle program for washing wool, silk, and clothes that require manual washing. Maximum temperature is WARM. This program has a short spinning cycle. Top spinning speed available is MAX rpm.
5.	**DARK WASH**	This program is used for washing dark laundry using special-purpose detergents for black laundry. We recommend turning dark garments inside out. The program washes at low temperatures, with gentle tumbling and lower spin speed.

Program		Description
6.	**TIME PROGRAM**	Use this program when you wish to wash the laundry for a specific amount of time. Duration can be set from 20 minutes to 3 hours (in 15-minute increments). In this program, select the corresponding washing time and temperature according to the type of laundry being washed.
7.	**AUTO PROGRAM (Auto)**	This program automatically adjusts the duration of the main wash and number of rinses depending on the amount of laundry in the machine. No extra program settings are possible.
8.	**QUICK PROGRAM (Quick)**	Program for normally soiled cotton and/or linen clothes for daily use up to a full load. You can select "Cold" (incoming water temperature), WARM, HOT or EXTRA HOT. The lower the selected temperature, the shorter the program time. Garments worn next to the skin should be washed at EXTRA HOT.
9.	**HEAVY**	Program for heavily soiled laundry. The temperature can be set separately; therefore, observe the instructions indicated on the clothing. Maximum available temperature is EXTRA HOT. It is suitable for very heavily soiled laundry. Spinning speed can be set to your preference. Program duration and amount of water will be adjusted to the amount of laundry.
10.	**EASY CARE**	Program for delicate clothing made of synthetic and mixed fibres, and for simple care of cotton. It may also be used for pillows, quilted jackets and similar items, as it uses a lot of water for the wash. Carefully read the washing instructions. If the outer layer has a membrane, do not use a conditioner. Washing temperature can be set up to HOT, and spinning speed can be set up to MAX rpm.
11.	**JEANS**	Program for washing jeans. It uses low temperature and a low spin speed. Due to a higher water level and an extra rinse, there will be no traces of detergent on the jeans.
12.	**SHIRTS PROGRAM (Shirts)**	This program washes the collars and cuffs without wrinkling them. The wash takes place at a low temperature, with a greater amount of water and gentle tumbling.
13.	**SANITIZE**	This program is used to wash clothes that require special care, such as baby clothes-, undreware or clothes for people suffering from skin allergies. We recommend turning the garments inside out as this will also thoroughly wash out the skin residues or residues of skin treatment products. The program is a combination of an extra long and high heating and extra rinsing with strong and sharp movements that removes any detergent residue.
14.	**SPORTS WEAR**	This program is suitable for washing clothing with membranes, waterproof clothing, and breathable clothing, requiring simple care. It is suitable for sportswear made of mixed materials. It combines low temperature with gentle tumbling. **Do not use conditioner with this program!**

Program		Description
15.	**CONDITIONING**	This is short program suitable for washing waterproof clothes and clothing made of microfibres. This is short program suitable for washing waterproof clothes- , if agent is used, and clothing made of microfibres. The program makes sure the clothes are waterproof and reduces adherence of dirt on the outer surface of the garments. Use of an impregnation agent is recommended. The program combines a short wash with cold water and gentle tumbling.
16.	**STAIN PROGRAM**	Choose the fabric and stain type from the menu, and the right stain removal program will be automatically selected. You can choose between the following types of stains: red wine, blood, grass, blueberries, butter/grease, chocolate, coffee/tea, egg, dairy products, kids, baby. After selecting the type of stain, select the type of fabric (Cotton or Synthetics) and washing temperature for the selected type of fabric. See chapter "TIPS BEFORE WASHING". You can also choose the spinning rate.
17.	**BEDDING PROGRAM (Bedding)**	This program is used to wash bedding, pillows, and larger items. Weekly wash of your bedding will remove skin residue and mites. Observe the instructions for washing and maintenance. The wash uses a large amount of water and extra rinse cycles.
18.	**ANTI-ALLERGY PROGRAM COTTON (Allergy program cotton)**	This program is used to wash normal to heavily soiled clothes that require special care, such as clothes for people with highly sensitive skin or skin allergies. We recommend turning the garments inside out as this will also thoroughly wash out the skin and other residues. You can also select the option to wash at maximum temperature and maximum spinning speed. Set temperature will be maintained for a longer time period than on conventional programs in combination with intense agitation and extra rinses.
19.	**ANTI-ALLERGY PROGRAM SYNTHETICS (Allergy program synthetics)**	This program is used to wash clothes that require special care, such as clothes for people with highly sensitive skin or skin allergies. The program is also suitable for people sensitive to washing detergents. We recommend turning the garments inside out as this will also thoroughly wash out the skin and other residues. Set temperature will be maintained for a longer time period than on conventional programs in combination with intense agitation and extra rinses.
20.	**QUICK PROFESSIONAL PROGRAM (Quick PRO)**	A quick program with high efficiency for smaller amounts of lightly soiled laundry. The program washes with intensive tumbling and lower spin speed. (4 kg (8.8 lbs), WARM, 59 min)
21.	**RINSE**	This program includes 2 cold rinses and a short spinning cycle. The program is suitable for laundry that only needs rinsing, and for cleaning cloths or mops.
22.	**SPINNING (Spin)**	Use the program when you only wish to spin the laundry.
23.	**DRAIN**	If you only wish to pump out the water from the washing machine, choose the Drain program.

Program		Description
24.	**DRUM CLEANING**	This program is used to clean the drum and to remove detergent residues and bacteria. The drum has to be empty. Only add a small amount of powder detergent. You may also add a small amount of vinegar (approximately 2 dl (0.85 cup)) or sodium bicarbonate “baking soda” (1 tablespoon or 15 g (0.5 oz)). Run this program at least once a month.
25.	**SETTINGS**	Use the program selector knob to choose Settings and confirm with button "6". Use the Program selector knob to scroll through the settings. The following options are available: − Child Lock, − Language (language selection), − **A**uto **D**ose **S**ystem (ADS), − Water (water hardness), − Sounds (acoustic signals), − Display (display unit: brightness & logo), − Programs (set of programs), − Reset. See chapter "SETTINGS".

STEP 6: CHOOSING THE PROGRAM SETTINGS

Using the program settings, the washing programs can be further adjusted to your wishes.
Some program settings may not be available for your selected program.
Selected program settings will remain stored after the end of the washing cycle and may be changed subsequently (except for delayed start which is not stored after the wash is complete).

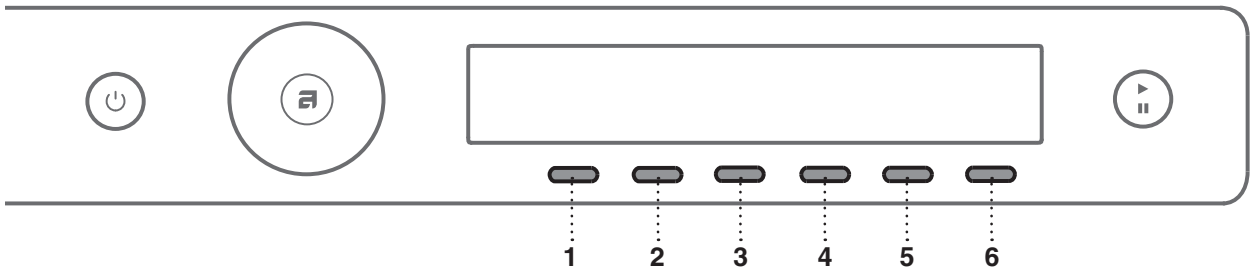

1. Washing program (that you selected)
2. Washing mode
3. Temperature
4. Spin speed
5. Delay start
6. Additional program option (choosing extra functions)

Choose the program settings before pressing the START button.
Program settings cannot be changed during the progress of a program.

Press and hold the button under the program setting to display the information (INFO) about each program setting.

Following are the program settings that may be selected using the buttons 2 to 6:

2. Washing mode

The following washing modes are available:

- *Normal Mode*
  (Basic setting)
- *Green mode*
  (Wash that saves energy; longer washing time, lower water consumption).
- *Speed Mode*
  (Time-saving wash; shorter washing times, higher water and energy consumption).
  In the Cotton program, we recommend a half-load.
- *Allergy Mode*
  (Wash with extra water, extra rinsing, extended washing time, higher water and energy consumption)
- *Night Mode*
  (Wash that reduces noise and extends washing time.)
- *Intense Mode*
  (Wash that improves cleaning performance, with extra water and extended washing time).

3. Temperature

The following temperatures are available for the selected program:
Cold / Warm / Hot / Extra Hot
The actual available temperature options will depend on the selected program.

WASH	TEMPERATURE	WASH / RINSE
Cold	/	No Heating
Warm	40°C / 105°F	Warm / Cold
Hot	60°C / 140°F	Hot / Cold
Extra Hot	90°C / 194°F	Extra Hot / Cold

4. Spin speed

The following spinning rates are available for the selected program: No drain / No spin / Min / Max (rpm) (depends on the model).
Default setting is MAX rpm; it depends on the selected program (spin rate can be changed – reduced or increased (only in some models)).
The actual available spin speed will depend on the selected washing program.

With the No drain option, the program will not include a spin cycle, and the water from the last rinse will remain in the washing machine. The laundry will stay in the water from the last rinse, which will prevent creasing. If you have selected the No d (No Drain) option, you have to select the Drain or Spinning program after the end of the washing program to pump the water out from the machine before you open the washing machine door.

5. Delay start

Choose the delayed start when you wish the washing program to start after a certain period of time (30 minutes) to 24 hours after you press the Start button).

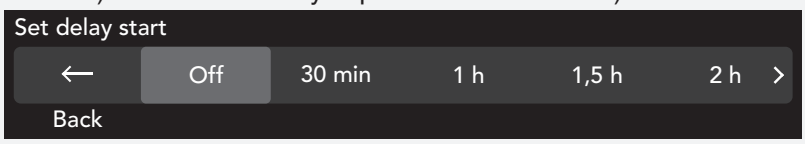

Use the Program selector knob to set the delay from 30 minutes to 6 hours in 30-minute increments, and then from 6 hours to 24 hours in 1-hour increments.

Press the button to confirm your selection.

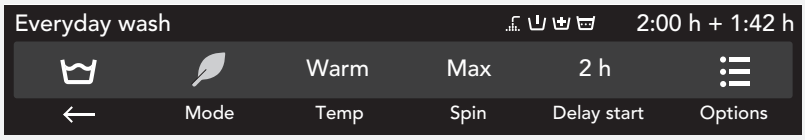

The estimated start delay time and time remaining until the end of the washing program will be indicated in the top line. When the countdown reaches zero, the selected washing program will start automatically.

To cancel or skip the delay and start the washing process immediately, press the 5 button (Skip).
When Start delay time is once set, it is not possible to change it; the only possibility is to »Skip it« (Skip delay) and continue with chosen program.

If you have set the delayed start function and you are using liquid detergent, we do not recommend choosing a programme with a pre-wash cycle.

6. Selecting extra functions (Options/more options)

Press the button to confirm the extra settings. Then, use the Program selector knob to scroll the list of functions or options. Confirm your selection by pressing the button under the selected function or option.
The following **extra functions** are available:

*** Favourite programs/Add to fav?**

To store the selected program as a favourite, press the ♥ button and the program with all your settings will be stored.
The stored program will be displayed at the start of the Main menu.

Up to 6 favourite programs can be stored.
If you do not wish to store the program after the wash, rotate the Program selector knob and you will return to the program selection; or, simply open the washing machine door.

Changing a favourite program
If you wish to store a program after the end of the washing cycle, but there is no more room for another favourite program (only 6 favourite program slots are available), then one of the existing stored favourite programs can be substituted with a new one.
The list of favourite programs will appear when you switch on the washing machine.

*** Super Rinse (extra rinses)** (depending on model)

To increase the number of rinse cycles (+2), select the Super Rinse setting. This is recommended for persons with highly sensitive skin and/or in areas with very soft water. Confirm the selection by pressing the On ☑ / Off ☐ button.
Use the ← button to return to Main menu.

*** Prewash**

To use a prewash before the main wash, choose the Prewash option. Use of this function is recommended for heavily soiled laundry or for laundry with stubborn surface stains. Confirm the selection by pressing the On ☑ / Off ☐ button.
Use the ← button to return to Main menu.
Add the prewash detergent into the prewash compartment and the main wash detergent into the main wash compartment of the detergent compartment (see chapter "DETERGENT COMPARTMENT").

*** High water level**

For a larger amount of water after the wash and spinning cycle, select the High Water Level option. Confirm the selection by pressing the On ☑ / Off ☐ button.
Use the ← button to return to Main menu.

*** Anti-crease**

To prevent creasing the wash, choose the Anti-Crease option (gently tumbling). This function is recommended for delicate laundry. Confirm the selection by pressing the On ☑ / Off ☐ button.
Use the ← button to return to Main menu.

Some functions may not be available on all programs.

STEP 7: START THE WASH

Close the washing machine door and press the **Start** ▶/Pause button.

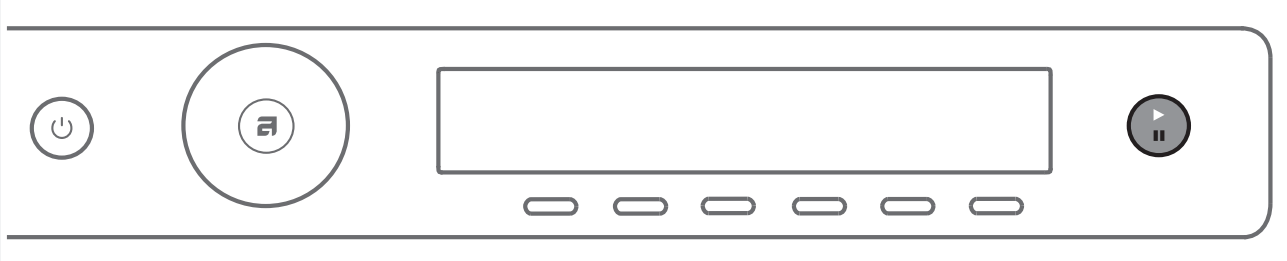

▶ Start (short press of the button – start/resume)
❚❚ Pause (short press of the button – pause)
Cancel (press and hold the button for 3 seconds)

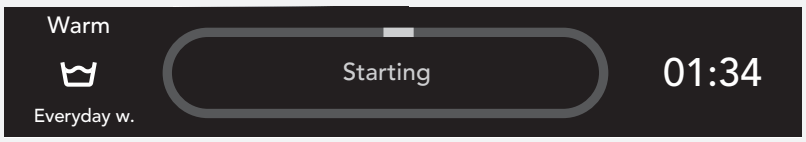

Washing process (circle) is coloured:
blue: beginning of the washing cycle
red: not possible to add any more clothes
green: end of the washing cycle

Remaining time

Depending on the selected program, anticipated washing time will be displayed in hours and minutes.
Actual washing time will depend on the selected program, load, type of laundry, spin speed etc.
Actual washing time may be longer or shorter than initially displayed.
Remaining time will be updated during the program duration, depending on the actual amount of laundry and amount of water pumped into the machine. The last remaining time update takes place before the final spinning cycle.
In case of uneven distribution of laundry, the time on the display will flash and it will not count down.
Once the laundry is evenly redistributed, the washing time will continue and it will stop flashing.

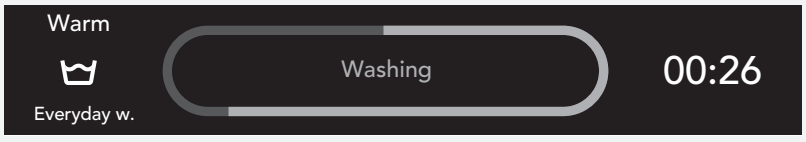

Adding or removing laundry after the start of the program

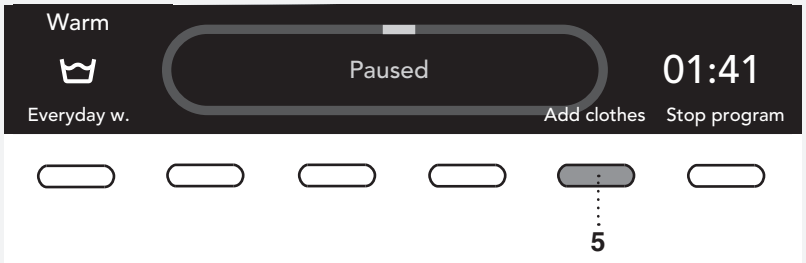

To add or remove laundry during the progress of a washing program, use the Start/**Pause** ❚❚ button to pause the program. Press the button 5 to choose Add Clothes, if the washing process (circle) is coloured blue.
If the washing process (circle) is coloured red, this option is not available.

The door may be opened when the water is pumped from the machine (but not completely pumped out). Then, add or remove the laundry. Close the door and continue the program. Press the **Start** ▶/Pause button. The program will resume from the point at which it was interrupted.

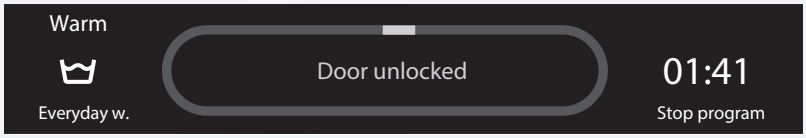

If the door cannot be opened, it is possible that the temperature in the machine is too high, and you won't be able to add the laundry.

Also, if the door cannot be opened, it is possible that the program has been running for too long and any laundry added at that point would not be efficiently washed.

Pausing, stopping or changing the program

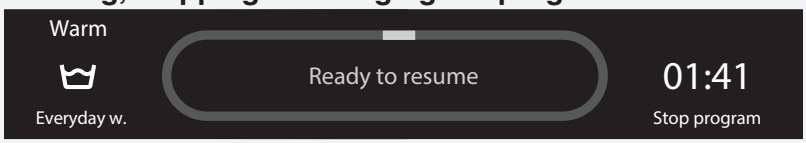

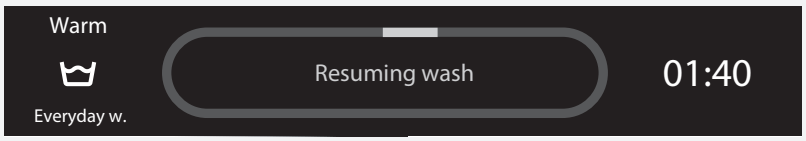

To pause the program, shortly press the Start/**Pause** ❚❚ button.

To resume a program, press the **Start** ▶ /Pause button again.

To stop the washing program, press the Start/**Pause** button and hold it for 3 seconds.
Choose "Stop program". The program is canceled and the water is pumped out of the machine if necessary. Only then will you be able to open the washing machine door. Use the Program selector knob to select a new program. If necessary, add detergent, and then press the **Start** ▶/Pause button.

If the temperature in the drum is very high, then cooling procedure starts before program is canceled.

A washing program can be paused by pressing the ON/OFF button.
The washing machine will switch off.
After the washing machine is switched on, press the **Start** ▶ button to resume the program.

Do not open the detergent compartment while the appliance is operating.

In some cases the door may be locked although no program is in progress (e.g. in case of an error). To unlock the door, press the Start/Pause button and hold it for a while.

STEP 8: END OF PROGRAM

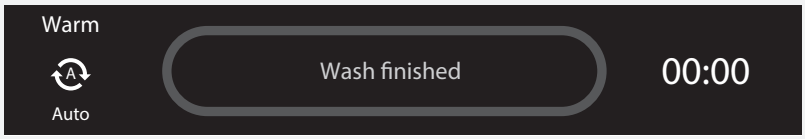

After the end of the washing program, the display will indicate that the program has been successfully completed ("Wash finished").

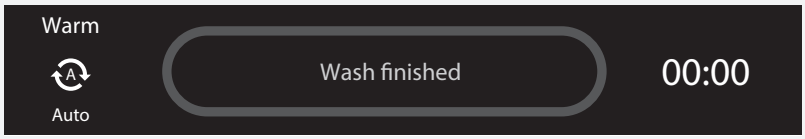

If you have selected the Anti-Crease extra function, gentle tumbling will continue after the end of the washing program in order to prevent creasing.

Open the door towards you and remove the laundry from the washing machine.
Make sure the washing machine drum is empty.

If you do not take any action within 5 minutes after the end of the program, the display will switch off to standby mode in order to save power.
The display will light up again if you press the ON/OFF button.

⚠ After the washing cycle, close the water intake and pull out the washing machine plug from the power socket.

SETTINGS

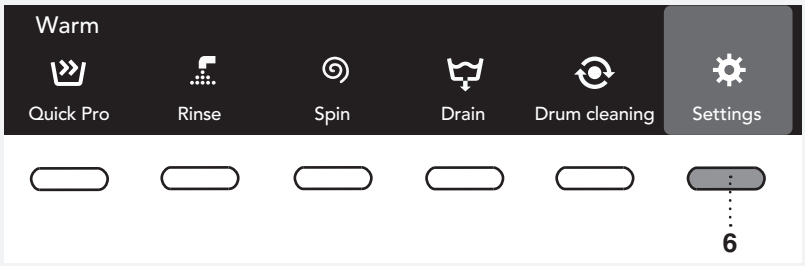

In the Main menu, use the Program selector knob to select Settings. Confirm the selection by pressing the button under the desired setting.

Then, use the Program selector knob to scroll the list of the following settings that you can adjust:

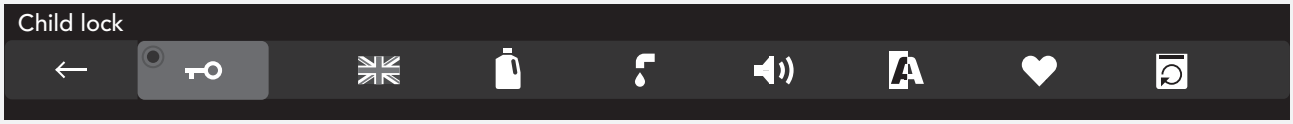

- Child Lock,
- Language (language selection),
- **A**uto **D**ose **S**ystem (ADS),
- Water (water hardness),
- Sounds (acoustic signals),
- Display: brightness & logo
- Programs (set of programs),
- Reset.

Use the Program selector knob to scroll to the button ← to return to Settings or to the Main menu.

Press the button under the setting to display concise information about the setting.

CHILD LOCK

Select Child Lock with the button.

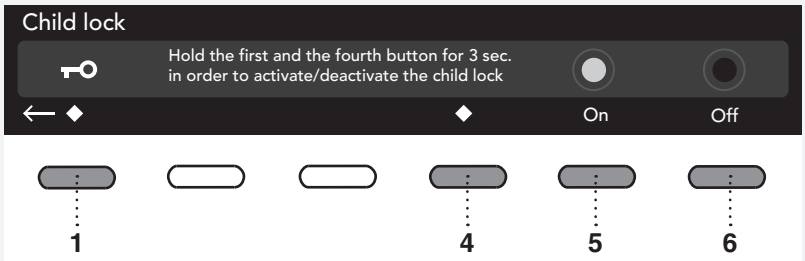

Choose between switching the child lock on or off.
When the child lock is activated, no other function can be selected.

On = Child lock can be activated manually, or it is activated automatically.
Manually: press the buttons 1 and 4 and hold them for 3 seconds.
Automatically: activated after 3 minutes.
The child lock may only be deactivated manually by pressing the buttons 1 and 4 and holding them for 3 seconds.
Off = The child lock cannot be activated.

Use the ← button to return to Settings.

To temporarily (for 3 minutes) switch off the Child lock, press the 1 and 4 buttons simultaneously and keep them pressed for 3 seconds.

LANGUAGE

You can choose between 24 languages. Press the button. Use the Program selector knob to scroll the list of languages.
Confirm selection with button under chosen language.

Use the ← button to return to Settings.

AUTO DOSE SYSTEM (ADS)

Press the ON/OFF button to switch on/off the ADS display in the Main menu.

For ADS settings, see chapter "SPECIAL FEATURES".

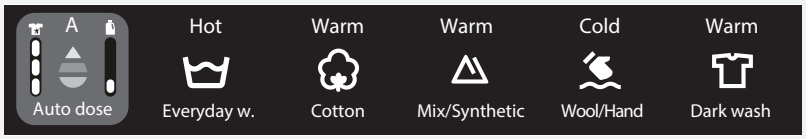

ON = display the ADS menu in the Main Menu

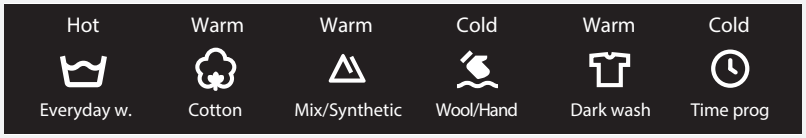

OFF = do not display the ADS menu in the Main Menu

Use the ← button to return to Settings.

WATER (WATER HARDNESS)

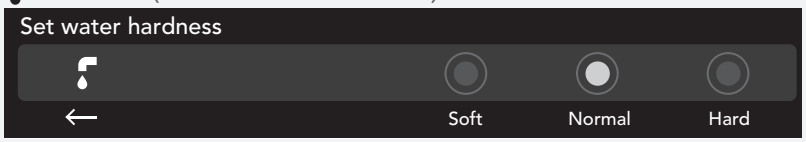

Choose water hardness between the following settings: soft / normal / hard. Confirm your selection with the button under the selected water hardness.

Use the ← button to return to Settings.

Water hardness can be measured with a water hardness indicator (available in a pharmacy). Check the information on water hardness with your local water supply company or authority.

Water hardness	**Hardness levels**			
	°dH (°N)	**m mol/l**	**°fH(°F)**	**p.p.m.**
1 – soft	< 8,4	< 1,5	< 15	< 150
2 – normal	8,4 - 14	1,5 - 2,5	15 - 25	150 - 250
3 – hard	> 14	> 2,5	> 25	> 250

Water hardness is specified using the following scales: The German water hardness scale (°dH) and the French water hardness scale (°fH). A water supply with a water hardness in excess of 6°dH (9°fH) must be softened. This is done automatically with the aid of the built-in water softener. In order for the softener to function optimally, it must be adjusted to the hardness of the water supply.
Contact the local waterworks, or measure the water hardness using the supplied test strip, to check the water hardness in your area.

How to use the test strip:

1. Turn on the water tap and let the water run for a minute or so.
2. Fill a glass with cold water.
3. Remove the test strip from its packaging.
4. Dip the test strip in the water for about one second.
5. Wait one minute. Now compare the colours of the squares with the water hardness table.

Test strip	°dH	°fH
4 green ☐☐☐☐	< 3	< 5
1 red ■☐☐☐	> 4	> 7
2 red ■■☐☐	> 7	> 12
3 red ■■■☐	> 14	> 25
4 red ■■■■	> 21	> 37

SOUNDS

You may choose the sound volume.

Use the program selector knob or buttons to choose the sound volume. During selection, the sound will be played with the currently highlighted volume.

Use the ← button to return to Settings.

DISPLAY UNIT

Set the brightness and logo display.

Use the program selector knob or buttons to choose the brightness.

Confirm your selection with the button under the logo display on/off option.
ON = display the logo at turning washing machine on
OFF = not display the logo at turning washing machine on

Use the ← button to return to Settings.

♥ PROGRAMS

The Main menu includes the entire set of programs that you can choose using the Program selector knob. This setting allows only displaying the selected program in the Main menu.

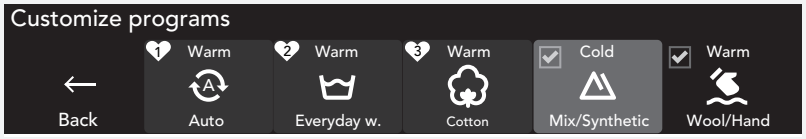

Use the Program selector knob to select a program.
Confirm your selection with the button under the selected program.
Symbol ☑ will appear next to the selected program.

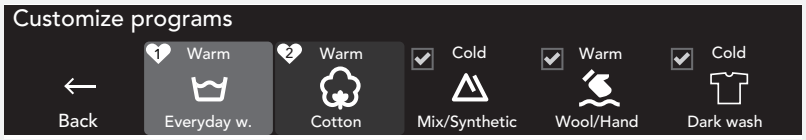

Only programs indicated with ☑.will appear on the display unit.

Use the ← button to return to Settings.

RESET

This means that all settings will return to the default settings and your own settings will be deleted.

Confirm the selection by pressing the button under the "reset" option that will appear on the display.

Use the ← button to return to Settings.

SPECIAL FEATURES

AUTO DOSE SYSTEM (ADS)

1. ADS display in the Main menu (see chapter "SETTINGS")
2. Choosing the ADS settings in the Main menu
3. Filling the ADS tank
4. Choosing the ADS settings by opening the detergent compartment
5. Switching off the automatic dosing function in the ADS menu

2. Choosing the ADS settings in the Main menu

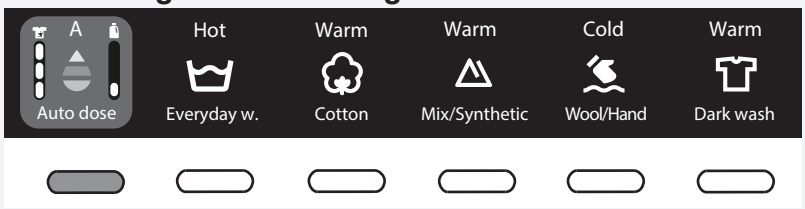

Set the automatic dosing by pressing the button under the ADS.

With this setting, you will choose which tank (A or B) the detergent will be dispensed from.

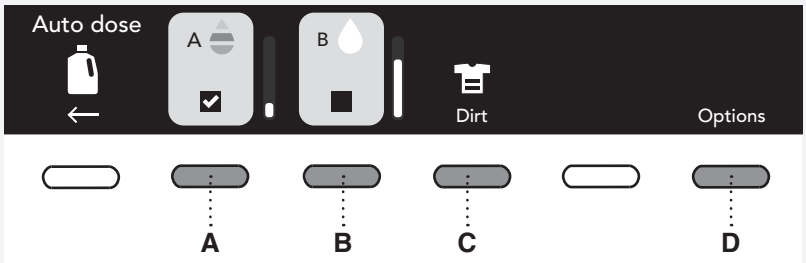

Auto Dose System can be set for each washing cycle separately.
The most recent setting is stored and it can be changed for the next washing cycle.
In some programs the ADS setting is not available.

Press the A/B button and hold if for a while to display information about the content of the A/B tank.

A, B. Choose the compartment from which the detergent is to be added depending on the type of laundry. You can choose between automatic detergent dosing from compartment A or from compartment B. Confirm the setting with ☑. Before choosing compartment A or B, you must fill the compartment with liquid detergent.

A Liquid detergent for Colour

B Liquid detergent for Black / White / Sensitive / Other. See section D/e (choosing the type of laundry).

C. Choose how heavily soiled the laundry is. Choose between:

	Lightly soiled laundry
	Normally soiled laundry
	Heavily soiled laundry

The washing program will choose the suitable amount of detergent depending on the setting for how heavily the laundry is soiled.

D. Press the Options button to set the following:

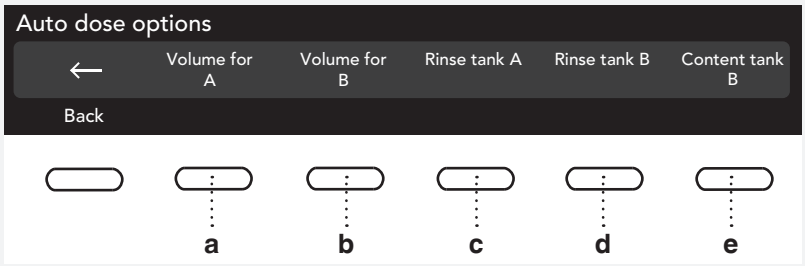

a, b. Amount of liquid detergent (ml/cycle from the compartment, A or B. Choose the amount of detergent according to liquid detergent manufacturer's recommendations specified on the packaging. For thus washing machine model, observe the recommendations for 6–8 kg (13.2-17.6 lbs) loads, medium water hardness and medium-soiled laundry. The washing machine's factory setting is 50 ml (0.013 gal). This amount will be adjusted depending on the water hardness setting, load sensed by the washing machine, and how heavily the laundry is soiled.

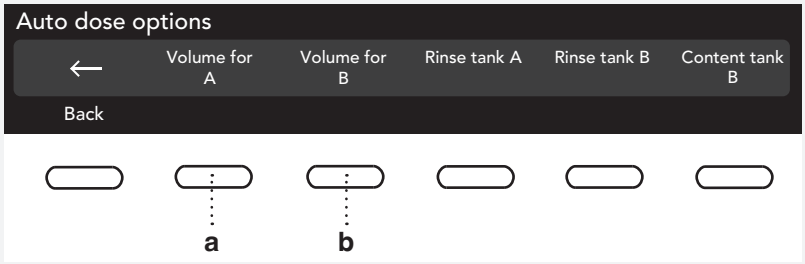

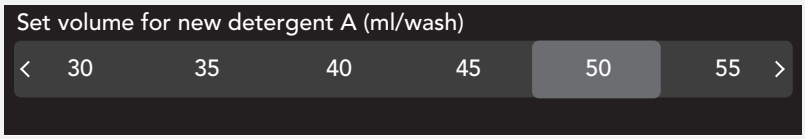

c, d. Cleaning the detergent tank

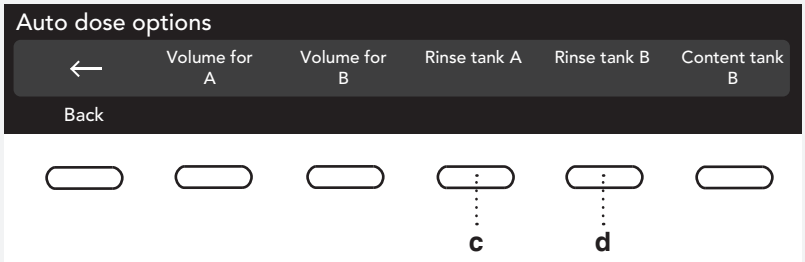

Select Options, then choose Rinse.

We recommend cleaning the detergent tank once per two months and when it is empty.
Before cleaning the detergent tank, close the detergent compartment.

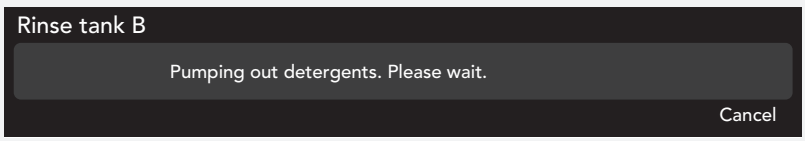

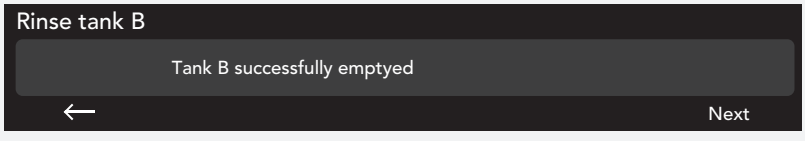

The compartment may be additionally rinsed with an extra amount of water via detergent compartment inlet. (500 ml of water). Open the detergent compartment to the final position and add water to the compartment to be cleaned. Then, close the detergent compartment and press the **Start** button ▶ (maximum amount of detergent that can be added to selected detergent tank is 1.5 l (0.39 gal))

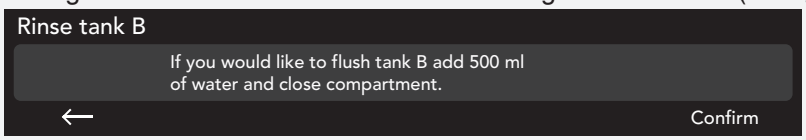

If you do not wish to rinse the tank with water, the process can be cancelled by pressing ← button.

If you have already started supplying the water, the process can no longer be cancelled. The ← sign will disappear and the water filling process has to be completed.

When cleaning of compartment B is completed, open the detergent compartment to the end position and pour the liquid detergent into compartment B.

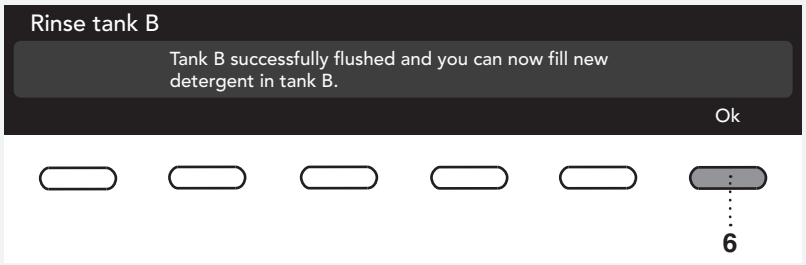

Cleaning time for a full tank (draining + rinsing) may be up to 60 minutes.

e. Type of detergent, and changing the detergent in the ADS

The detergent in the compartment A shall only be used for one type of laundry: coloured wash (Colour). The detergent in compartment B shall be designated for several types of laundry.

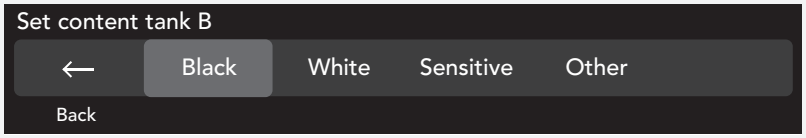

When you change the detergent in the tank B, select another type of laundry. The question whether you are sure you wish to change the detergent will appear on the display unit.

We recommend changing the detergent when the detergent tray is empty.
Otherwise, the compartment has to be emptied. In this case, however, the detergent compartment has to be closed first.

Pour the other type of liquid detergent into compartment B (e.g. if you have selected Black, you will probably add the special detergent for black laundry).

If the compartment is not empty, then the liquid detergent should be pumped out from the compartment and the compartment should be cleaned (see section c, d. "Cleaning the compartments").

3. Filling the compartment with liquid detergent

Before adding the liquid detergent into the tank, pull out the detergent compartment as far as it will go. (If the detergent compartment is not fully opened, the liquid detergent will not flow into the tank.)

The washing machine has to be switched on.

Please do not fill detergent (liquid detergent) while program is running!

Start adding the liquid detergent to the selected compartment. The level for the selected compartment, indicated on the display unit, will increase. When the compartment is full, stop adding the detergent. (maximum amount of detergent that can be added to selected compartment is 1.5 l (0.39 gal)).

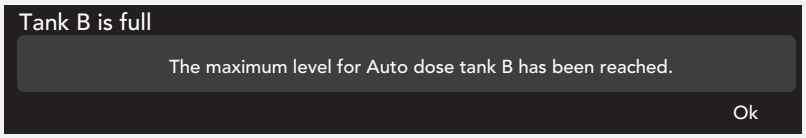

Before closing the dosing tank, wait for 1 minute to let the detergent flow into the compartment.

If you add too much liquid detergent, it may overflow into the washing machine drum. To remove the detergent from the drum, use the Rinse program.

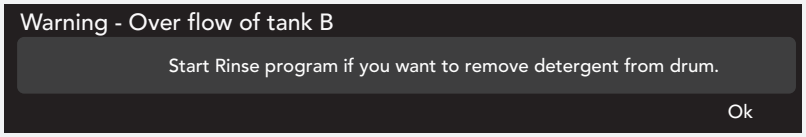

4. Choosing the ADS settings by opening the detergent compartment

Pull out the detergent compartment as far as it will go, to its end position! The ADS setting in the Main Menu will be displayed.

All steps are the same as with section 2 (Choosing the ADS settings in the Main menu).

If you selected OFF in the Settings (i.e. do not display the ADS menu in the Main Menu), then the ADS menu will not be displayed when you open the detergent compartment.

Only add liquid detergents into the ADS tanks.

Do not mix liquid detergent with conditioner. Do not add conditioner into any ADS tank; conditioner has to be added **manually** to the compartment labelled with ❀.

Do not mix different liquid detergents. Before changing the liquid detergent (depending on the type of laundry), the tanks have to be cleaned. See sections c, d. Cleaning the tanks.

5. Switching off the automatic dosing function in the ADS menu

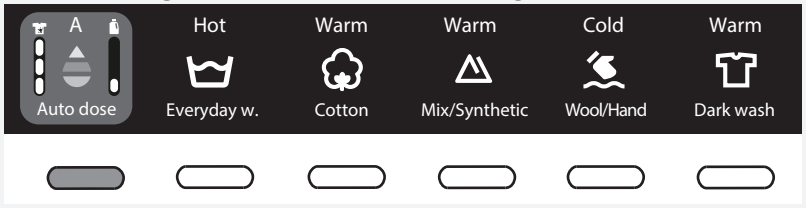

Press the button under the ADS in the Main Menu.

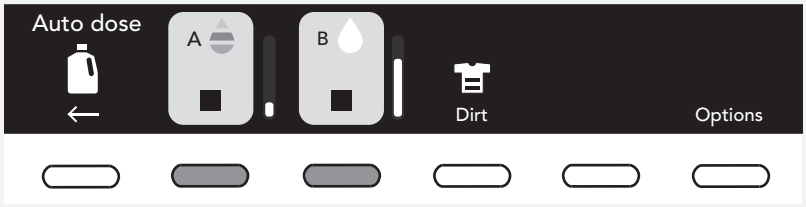

Tanks A and B should not be checked (no check mark in the square ☐). Thus, the system will not automatically dose the detergent.
Liquid detergent has to be added manually into the detergent compartment compartment.

CLEANING AND MAINTENANCE

CLEANING THE FILTER

The washing machine has a filter that will retain smaller objects such as coins, buttons, hair etc.

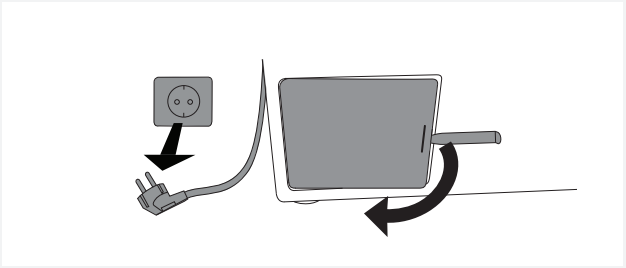

1 Before cleaning, drain the water from the washing machine using the Drain program, and disconnect the washing machine from the power mains.

Open the pump filter cover using appropriate tools (emergency door opening tool is located on the back side of the dispenser).

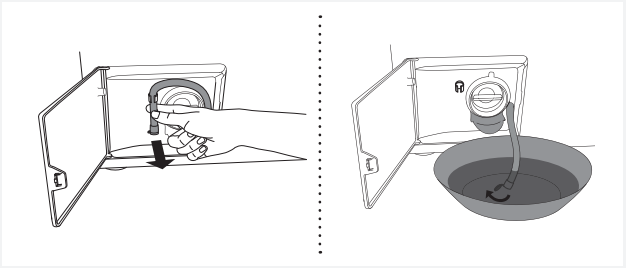

2 Release the water drain hose from the holder.

Before cleaning the filter, drain the water from the washing machine by placing the end of the water drain hose over a large shallow container and opening the cap on the water drain hose.

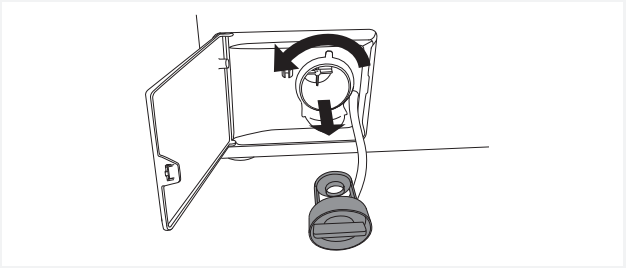

3 Gradually rotate the filter in the counter-clockwise direction and pull it out.

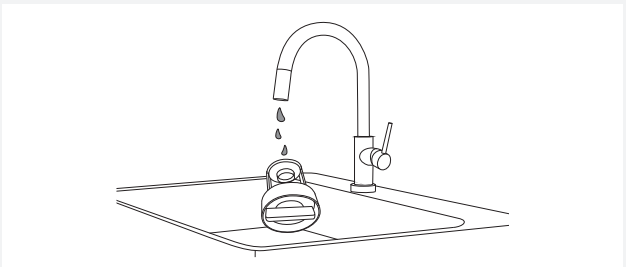

4 Clean the filter thoroughly under running water.

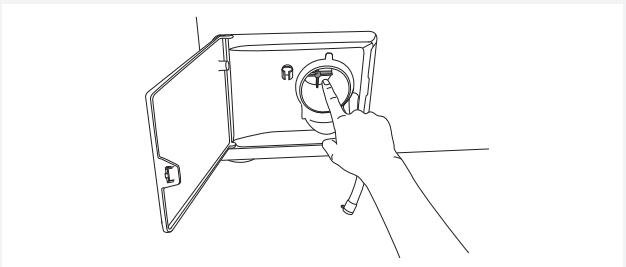

5 Remove all objects and impurities from the filter housing and the impeller.

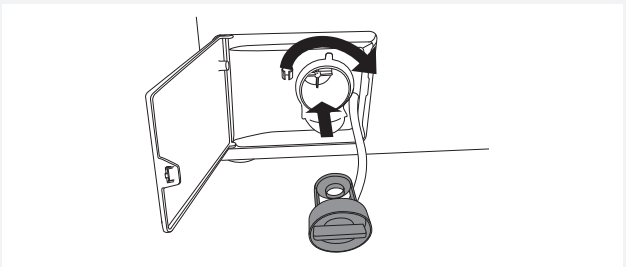

6 Replace the filter as shown in the figure and fasten it by rotating in the clockwise direction. For a good seal, the filter seal surface should be clean. Also re-install the drain hose.

CLEANING THE DETERGENT COMPARTMENT AND DOOR RUBBER GASKET

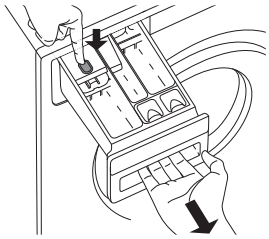

1 Press the tab to completely remove the detergent compartment from its housing.

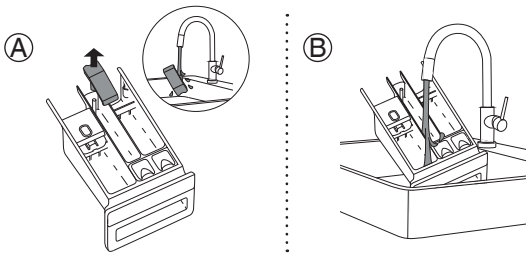

2 Rinse and thoroughly clean the tray. You may also remove the cap from the plug in the conditioner compartment (A). Clean any residue from the cap and tube.

Clean the detergent compartment (B) interior.

Replace the cap on the plug.

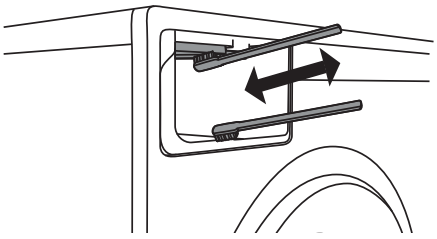

3 Use a brush to clean the nozzles on the upper side of the detergent compartment housing.

After a washing program, nozzles that clean the interior of the dispenser are automatically switched on (only available in some models).

Use a brush to clean the lower part of the detergent compartment housing.

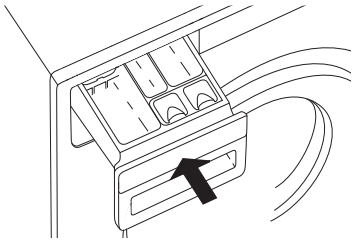

4 Replace the detergent compartment into its housing.

Close the detergent compartment!

Do not wash the detergent compartment in the dishwasher!

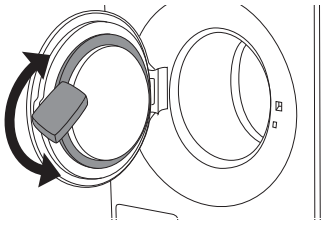

5 After every wash, wipe the rubber door seal to extend its useful life.

CLEANING THE AUTO DOSE SYSTEM (ADS)

Cleaning the detergent compartment:

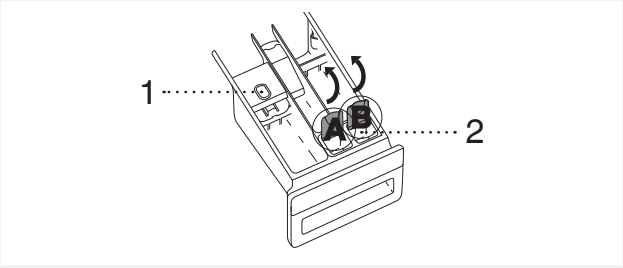

1 Remove the detergent compartment from the detergent compartment housing by pulling it out and pressing the release tab (1).

Open the cover for detergent compartment A and B (2).

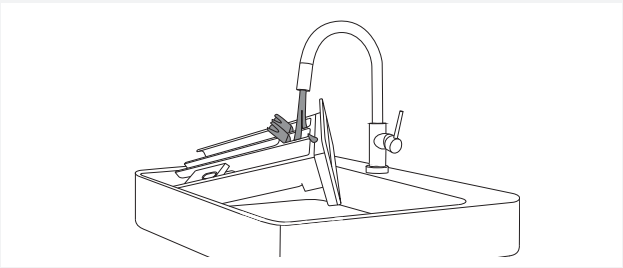

2 Rinse the detergent compartment by directing a stream of running water through it.

CLEANING THE APPLIANCE EXTERIOR

Clean the appliance exterior and the display unit using a soft damp cotton cloth and water.
Do not use solvents or abrasive cleaners that could damage the appliance (please observe the recommendations and warnings provided by the manufacturers of the cleaning agents).

Do not clean the washing machine with a jet of water!

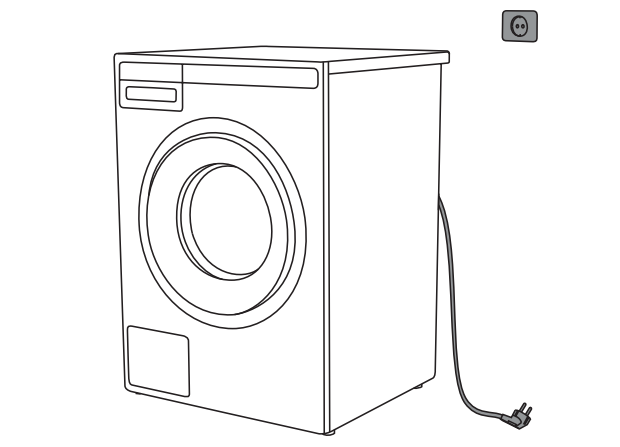

Always disconnect the washing machine from the power mains before cleaning.

CLEANING THE WASHING MACHINE INTERIOR AGAINST ODOURS

Modern detergents often allow washing clothes at low temperatures. This means that residue may accumulate in the washing machine, which in turn could cause odours.
To avoid such odors, we recommend running the self-cleaning program (Drum-cleaning) once per month. Use a small amount of powder detergent and do not put any laundry in the drum.

CLEANING THE RINSING HOLES (UNDER THE AGITATOR IN THE DRUM)

If you believe that objects like nails or paper clips fell into the washing machine drum, check the area underneath the agitator. Such objects may rust (corrode) and cause stains on your clothes. Nails and other sharp objects can also cause holes in the fabric.

Proceed as follows:

1 Insert a screwdriver or a similar tool into the slot in the rib and carefully push it to the left.

2 Hold the rib with the other hand and pull it towards you.

3 Lift the drum rib.

4 Remove any objects.

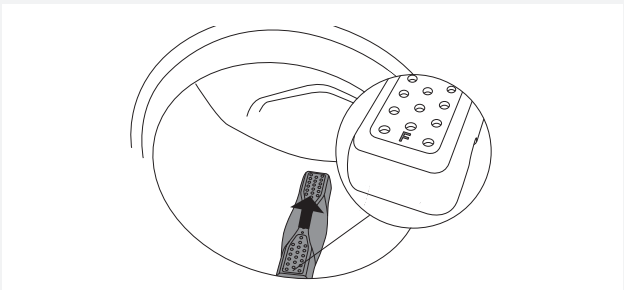

5 Place the rib into the installation slot indicated with "F" towards you. Make sure all ribs are firmly in place in their respective slots in the drum. Push the rib inwards (as indicated by the arrow in the figure) until it snaps.

If you are using hard water

If you are washing with hard water (causing limescale build-up), a greyish-white film may appear on the washing machine drum. To remove this film, add vinegar (approximately 2 dl (0.85 cup) or sodium bicarbonate “baking soda” (1 tablespoon or 15 g (0.5 oz))) into the washing machine drum and select any program with a temperature of EXTRA HOT, or the Drum Cleaning program. See STEP 5: Choose the program.
Repeat the process as necessary.
Water hardness can be set under "SETTINGS / Water / Water Hardness".

ERRORS AND TROUBLESHOOTING

Disturbances from the environment (e.g. the power grid) may result in various error reports (see Troubleshooting table). In such case:

- Switch off the appliance, wait for 1 minute, switch the appliance back on, and repeat the washing program.
- If the error persists, call an authorized service unit.
- You will be able to solve most of the **problems** in appliance operation by yourself (see Troubleshooting table below).
- **Repairs** may only be carried out by an adequately trained person.
- Repair or any warranty claim resulting from incorrect connection or use of the washing machine shall not be covered by the warranty. In such cases, the costs of repair shall be charged to the user.

The warranty does not cover the errors or failures resulting from disturbances from the environment (lightning strike, power grid failures, natural disasters etc.).

Problem/error	Cause	What to do?
Washing machine door does not open.	• Water level too high.	• Drain the water using the Drain or Spinning program. See "Step 5: Choose the program".
	• Water temperature in the washing machine is too high.	• Wait for the water temperature to drop and pump out the water. If you still cannot open the door, use the emergency door opening tool (see chapter Manual opening of washing machine door" in this chapter).
The machine will not start.	• Power supply failure.	• Press the **Start** ▶ button to resume the program.
Washing program is not in progress.	• Washing machine door is not properly closed.	• Firmly press on the washing machine door until you hear two clicks when it is closed.
	• There is no voltage in the power outlet.	• Check if the plug is connected to the power outlet and whether there is electric current (or voltage) in the outlet.
	• Delayed start function has been selected.	• To cancel the delayed start function, press the **Start** ▶ button and hold it for three seconds.
Washing time is longer than anticipated (the time is regularly updated on the display unit).	• Low inlet water temperature.	• Program duration can be up to 60% longer than initially anticipated in the normal progress.
	• UKS* (*unbalance system) stability system engaged due to unevenly distributed laundry.	• Program time is extended due to the need to redistribute the laundry in the drum.
	• Low mains voltage.	• Washing machine needs more time because the power mains voltage is too low.
	• Power supply failure.	• Program time is extended by the duration of the power supply failure.
Display does not light up.	• There is no voltage in the appliance.	• Check if the plug is connected to the power outlet and whether there is electric current (or voltage) in the outlet.
The wording on the display unit is not in your language.	• You have not selected your preferred language yet.	• Choose the preferred language (see "STEP 5 / Settings / Choosing the language").
Wet laundry ("unbalance" will appear on display)	• A small amount of laundry will often be unevenly distributed.	• Loosen and redistribute the laundry and select the Drain or Spinning program. • Increase the amount of laundry in the washing machine and restart the program (see "STEP 7: Start the wash / Adding or removing laundry after the start of the program").

Problem/error	Cause	What to do?
There are traces of grease (or grease rolls) on the clothes.	• The laundry was very greasy.	• Wash the laundry again. When your laundry is this heavily soiled, add more washing powder or use a liquid detergent in combination with a more powerful (longer) program.
There are still stains on the laundry.	• You used bleach-free liquid detergent or powder detergent for coloured laundry.	• Use a detergent that contains bleach.
	• You selected an unsuitable program.	• Use special stain removers.
There are white residues of washing powder on the laundry.	• This is not due to poor rinsing by your washing machine, but rather due to phosphate-free detergents which contain ingredients (zeolites) for water softening. These ingredients may be deposited on the laundry.	• Immediately rinse the laundry again. • Use liquid detergents that do not contain zeolites. • Try removing any residues with a brush.
There is powder detergent left in the main wash compartment of the detergent detergent compartment.	• Water pressure not high enough.	• Clean the net on the water supply hose.
	• Some washing powders may stick strongly to the detergent compartment if it is empty.	• Choose higher water level or extra rinse (see "Step 6 / Choose program settings"). • Wipe the detergent compartment before adding the powder detergent.
There is conditioner left in the conditioner compartment of the detergent compartment.	• Plug cap is not positioned correctly or it is clogged.	• Make sure the plug cap in the conditioner compartment of the detergent compartment is positioned correctly. • Clean the plug cap (see chapter "CLEANING AND MAINTENANCE / Cleaning the detergent compartment").
Odour in the washing machine drum.	• Residues of fabric, washing detergent, and conditioner in the filter.	• Check if the filter is clean.
	• Development of germs and bacteria.	• Choose a self-cleaning (Drum Cleaning) program (see "STEP 5: Choose the program").
Machine is moving during operation.	• Feet not adjusted correctly.	• Level the feet (see chapter "INSTALLATION AND CONNECTION / Adjusting the feet").
	• Transport bolts not removed.	• Remove the transport bolts (see chapter "BEFORE USING THE APPLIANCE FOR THE FIRST TIME / Transport protection").
Machine is moving during spinning.	• Unevenly distributed laundry or not enough laundry.	• The washing machine will automatically decrease the spin speed if vibration is too strong. • Increase the amount of laundry in the washing machine and restart the program (see "STEP 7: Start the wash / Adding or removing laundry after the start of the program").
Noisy (loud) drain pump	• Drain pump filter is clogged. • Filter housing and drain pump impeller are clogged.	• Make sure the drain pump filter is clean. • Make sure the filter housing is clean. (See chapter "CLEANING AND MAINTENANCE/ Cleaning the filter")

Manual opening of washing machine door

⚠ Washing machine door may be opened **manually** if the appliance is not connected to the power mains and if the water has been pumped out of the machine.

A Choose the Spinning or Drain program to pump the water from the machine. If this does not work, water has to be drained from the washing machine drum manually. See chapter "Cleaning the trap and drain pump" in the chapter "CLEANING AND MAINTENANCE".
B Make sure the main switch is off and that the plug is disconnected from the power outlet.
C Take the emergency door opening tool (found at the back of the detergent compartment) and insert it into the upper part of the slot on the right-hand side of the washing machine door latch.

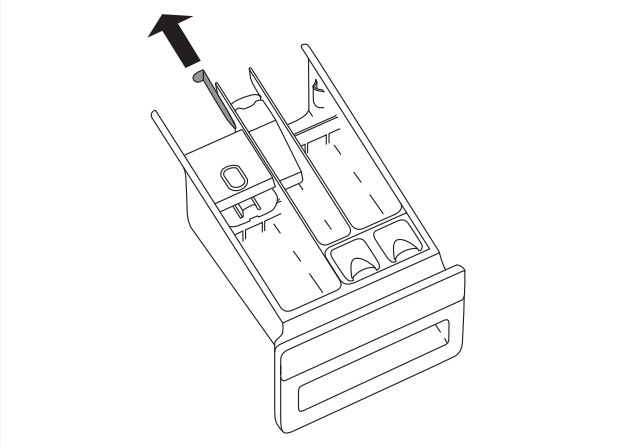

D Press the key (key=the emergency door opening tool) downwards (all the way, until you hear a click) to unlock the washing machine door. When the door is unlocked, open it by pulling towards you.

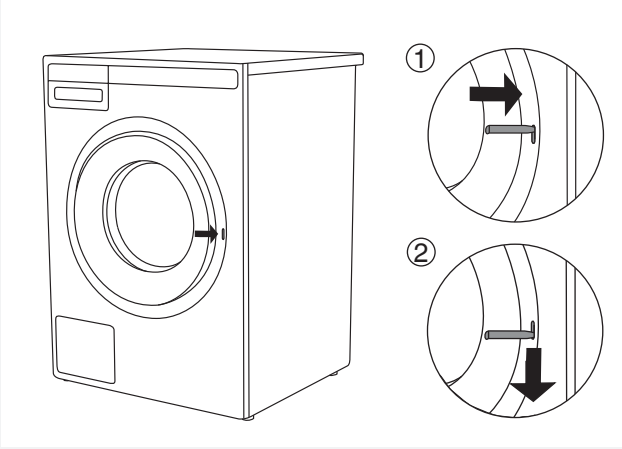

If the washing machine door still cannot be opened, call a service technician.

FAILURE DISPLAY

In case of a failure while a program is in progress, the relevant Error XX is indicated on the display unit.

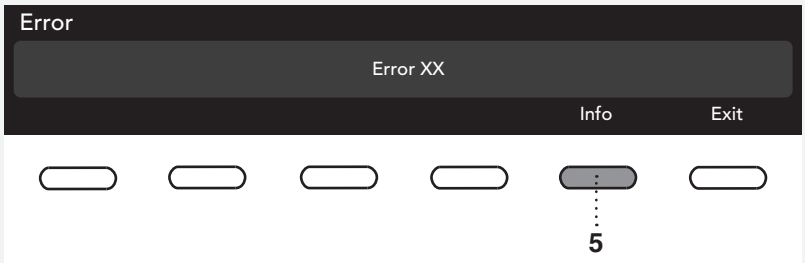

Press the INFO button to display the error description.

Switch off the appliance and turn it back on.

Errors indicated on the display unit may include the following:

Error	Error indication on the display unit	What to do?
E0	INCORRECT SETTINGS	Restart the program. If the error reoccurs, call a service technician.
E1	THERMISTOR ERROR Temperature sensor error.	• Inlet water too cold. Repeat the washing program. • If the appliance reports this error again, call a service technician.
E2	DOOR LOCK ERROR	Turn the appliance OFF and then switch it ON again. Start the program again. If the error reoccurs, call service technician.
E3	WATER FILLING ERROR	Check the following: • is the water inlet valve open, • is the filter on the water inlet hose clean, • is the water supply hose deformed (clipped, clogged etc.), • is the pressure in the water mains between 0.1 and 1 MPa (1–10 bar). Then, press the **Exit** button to resume the program. If the error reoccurs, call a service technician.
E6	HEATING ERROR Water heating error.	Restart the program. If the error reoccurs, call a service technician.
E7	DRAINING ERROR Water draining error.	Check the following: • is the pump filter clean, • is the drain hose clogged, • is the drain clogged, • is the drain hose fitted at the right height (see chapter on drain hose installation in the instruction manual). Then, press the **Exit** button again. If the error reoccurs, call a service technician.
E7.1	DRAIN SYSTEM ALERT Water drain system alert.	Alert about reduced water flow in the pumping stage. Check the following: • is the pump filter clean, • is the drain hose clogged, • is the drain clogged, • is the drain hose fitted at the right height (see chapter on drain hose installation).
E8	SPINNING ERROR	Turn the appliance OFF and then switch it again ON. Start the program again. If the error reoccurs, call service technician.
E10	WATER LEVEL SENSOR ERROR	Turn the appliance OFF and then switch it again ON. Start the program again. If the error reoccurs, call service technician.

Error	Error indication on the display unit	What to do?
E11	OVERFLOW	If there is water in the drum that exceeds a certain level, and an error is reported on the display unit, the washing program will be interrupted and water will be pumped out of the washing machine. Restart the program. If the error reoccurs, call a service technician. If there is water in the drum that exceeds a certain level, and an error is reported on the display unit, while the washing machine continues to add water, close the water tap and call a service technician.
E12	MOTOR ERROR / MOTOR CONTROL ERROR	Restart the program. If the error reoccurs, call a service technician.
E13.1	UNBALANCE EMPTY DRUM	Call a service technician.
E13.2	INERTIA ERROR	Call a service technician.
E23	DOOR UNLOCK ERROR Error while unlocking the door.	Door is closed, but it cannot be unlocked. Turn off the washing machine, then turn it back on. If the error reoccurs, call a service technician. See instructions for opening the door – chapter on manual door opening.
E29	REED SWITCH 1 ERROR	Call a service technician.
E30	REED SWITCH 2 ERROR	Call a service technician.
E31	PERISTALTIC PUMP 1 ERROR	Call a service technician.
E32	PERISTALTIC PUMP 2 ERROR	Call a service technician.
E33	AD1 DETERGENT LEVEL SENSOR ERROR	Restart the program. If the error reoccurs, call a service technician.
E34	AD2 DETERGENT LEVEL SENSOR ERROR.	Restart the program. If the error reoccurs, call a service technician.
E35	COMMUNICATION AD AND PMCU	Turn off the appliance and turn it back on. If the error reoccurs, call a service technician.
E36	COMMUNICATION UI** AND PMCU Error in UI** and PMCU communication.	Turn off the appliance and turn it back on. If the error reoccurs, call a service technician.
E37	PMCU/UI** software versions are not compatible.	Call a service technician.
	UNBALANCE Unevenly distributed laundry.	Manually distribute the laundry and run the spinning program.
	UNABLE TO LOCK DOOR	Open and firmly close the door again to final position. If the error reoccurs, call a service technician.
	STERIL TUB ALERT Warning – Self-cleaning program	Use the self-cleaning program (DRUM CLEANING); see STEP 5.
	Preparing to door unlocking. (press INFO): Draining must be performed. Wait for door unlocking.	Wait that process is finished. If after this process no error is shown, new cycle can be run.

** UI = (User Interface)

Unevenly distributed laundry or lumps of laundry in the washing machine drum may cause problems such as vibration and noisy operation. The washing machine will sense this and activate the UKS* (*unbalance system).
Smaller loads (e.g. one towel, one sweater, one bathrobe etc.) or clothes made of materials with special geometrical properties are virtually impossible to distribute evenly across the washing machine drum (slippers, large items etc.). This results in several attempts to redistribute the laundry, which in turn leads to longer program duration. In extreme cases of unfavourable conditions, the program can be completed without the spinning cycle.
UKS* (*unbalance system) allows stable operation and extends the useful life of the appliance.

LIMITED WARRANTY – RESIDENTIAL APPLIANCES

ASKO Appliance Inc., a Delaware corporation (hereinafter “ASKO”) warrants the original purchaser (the “ASKO Customer”) of the ASKO product (the “ASKO Product”), who purchased the appliance from a distributor, dealer, manufactures representative or other seller who has been authorized by ASKO (“Authorized ASKO Dealer”), that this ASKO Product is free of defects in material and workmanship, subject to the terms and conditions set forth herein. The limited warranty covers parts and labor, except as set forth in this Limited Warranty. Service must be provided by an ASKO designated service company. YOUR SOLE AND EXCLUSIVE REMEDY UNDER THIS LIMITED WARRANTY SHALL BE PRODUCT REPAIR AS PROVIDED HEREIN. The limited warranty is valid only in the United States or Canada and applies only when the appliance is used in the country in which it was purchased. Proof of original purchase date is required to obtain service under this limited warranty.

Residential ASKO Products Used Exclusively for Household/Personal Purposes:

Two (2) Years limited Warranty – Any warranty service claims for residential ASKO Products must be fi led with ASKO within two (2) years from date of purchase.

Residential ASKO Products Not Used Exclusively for House Hold Purposes, used Commercially or Use in marine, Mobile or Aeronautical Applications:

One (1) Year limited Warranty – Any warranty service claims for ASKO Products not used exclusively for household and personal use, used commercially or used in marine, mobile, or aeronautical application must be fi led with ASKO within One (1) year from date of purchase.

ITEMS EXCLUDED FROM WARRANTY

This limited warranty does not cover:

1. Replacement parts or repair labor if this appliance is used in a manner that is inconsistent to published user or operator instructions and or/or installation instructions.
2. Service calls to correct the installation of your appliance, to instruct you on how to use your appliance, to replace or repair house fuses, or to correct house wiring or plumbing.
3. Consumable parts are excluded from warranty coverage.
4. Damage resulting from accident, alteration, misuse, abuse, fi re, fl ood, acts of God, improper installation, installation not in accordance with electrical or plumbing codes, or use of products not approved by ASKO.
5. Cosmetic damage, including scratches, dents, chips or other damage to the fi nish of your appliance, unless such damage results from defects in material or workmanship and is reported to ASKO within 5 days from date of purchase.
6. Pickup and delivery. This appliance is intended to be repaired in your home.
7. Repairs to parts or systems resulting from unauthorized modifi cations made to the appliance.
8. Expenses for travel and transportation for product service if your appliance is located in a remote area where service by an authorized ASKO servicer is not available.
9. The removal and reinstallation of your appliance if it is installed in an inaccessible location or is not installed in accordance with ASKO’s published installation instructions.
10. Replacement parts or repair labor on appliances with original model/serial numbers that have been removed, altered or cannot be easily determined.

DISLCAIMER OF IMPLIED WARRANTIES

YOUR SOLE AND EXCLUSIVE REMEDY UNDER THIS LIMITED WARRANTY SHALL BE PRODUCT REPAIR AS PROVIDED HEREIN. ASKO SHALL NOT BE LIABLE FOR INCIDENTIAL OR CONSEQUENTIAL DAMAGES. Some states and provinces do not allow the exclusion or limitation of incidental or consequential damages, so these limitations and exclusion may not apply to you. This warranty gives you specifi c legal rights, and you also may have other rights that vary from state to state or province to province.

If you think you need repair service, fi rst see the “Trouble Shooting” section of the Use & Care Guide. If you are unable to resolve after checking “Trouble Shooting” additional help can be found by calling ASKO Consumer Care at 1-800-898-1879

SERVICE

BEFORE CALLING A SERVICE TECHNICIAN

When you contact a service centre, please state the model (1), type (2), and serial number (3) of your washing machine.
Model, type, and serial number are indicated on the rating (type) plate located on the washing machine door casing.

⚠ In case of a failure, only use approved spare parts by authorized manufacturers.

⚠ Repair or any warranty claim resulting from incorrect connection or use of the washing machine shall not be covered by the warranty. In such cases, the costs of repair shall be charged to the user.

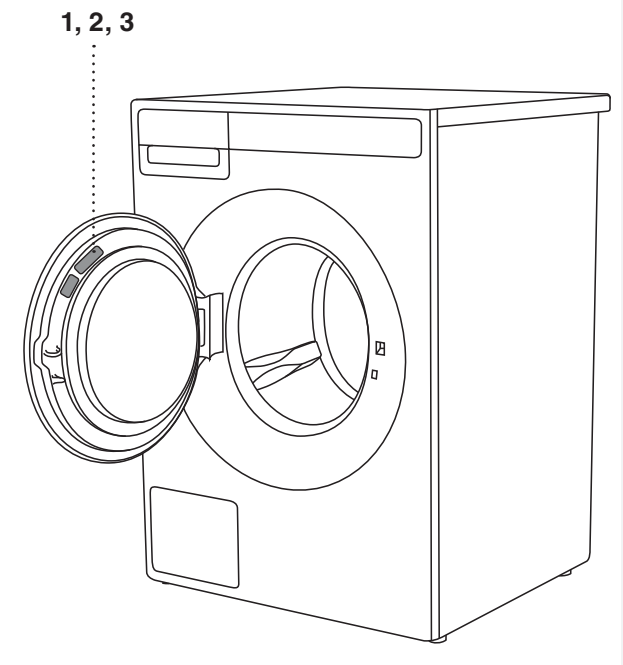

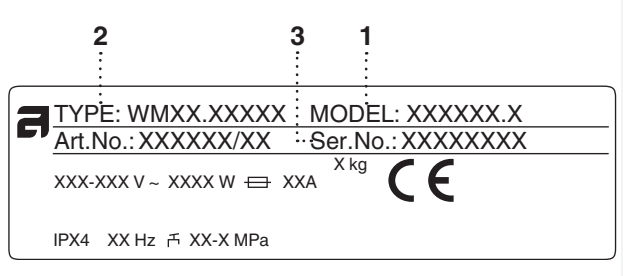

Should you need further assistance, you can write to ASKO Appliances with any questions or concerns at the address below:
ASKO Appliances Inc.
Customer Care Center
PO Box 940609
Plano, Texas 75094-0609

TECHNICAL INFORMATION

Height	850 mm (33 15/32")
Width	595 mm (23 27/64")
Depth	695 mm (27 23/64")
Weight	93 kg (205 lbs)
Drum volume	80 l (2.82 cu.ft)
Rated power	See rating plate
Heater power	See rating plate
Water pressure	0.1–1 MPa 1–10 kp/cm^2 10–100 N/cm^2
Material for the drum and dispenser	Stainless steel
Housing material	Hot-dip galvanized and powder coated sheet metal, or stainless steel sheet (depending on model)
Water connection	1.5 m (59 1/16") pex hose
Drain hose	1.6 m (63") polypropylene hose

PROGRAM TABLE

Program	Prewash	Temp. °C	Super rinse	Agitation level**	Spinning speed (rpm)	Maximum load (kg) (lbs)	Water consumption (approximately, in litres)	Power consumption (approximately, kWh)	Program duration (approximately, in hours and minutes)
1. Everyday wash	X	HOT	X	I	MAX	12 (26.5)	95	2.80	2:31
2. Standard cotton	X	WARM	X	N	MAX	12 (26.5)	93	2.00	2:59
3. Mix/Synthetics	X	WARM	X	S	MAX	4.5 (9.9)	65	0.70	1:57
4. Wool/Hand wash	X	WARM	X	H	MAX	3 (6.6)	58	0.28	0:52
5. Dark wash	X	WARM	X	E	MAX	4 (8.8)	50	0.66	1:22
6. Time program	X	WARM		E	MAX	2 (4.4)	-	-	-
7. Auto program	X	WARM	X	N	MAX	12 (26.5)	-	-	-
8. Quick program	X	COLD	X	N	MIN	4 (8.8)	40	0.50	0:50
9. Heavy	X	HOT	X	I	MAX	12 (26.5)	103	2.50	2:51
10. Easy care	X	WARM	X	E	MAX	4.5 (9.9)	65	0.68	2:00
11. Jeans	X	WARM	X	S	MAX	4.5 (9.9)	52	0.68	1:25
12. Shirts program	X	WARM	X	E	MAX	4 (8.8)	49	0.65	1:10
13. Sanitize	X	HOT	X	I	MAX	12 (26.5)	93	2.20	2:29
14. Sports wear	X	WARM	X		MAX	4.5 (9.9)	50	0.60	1:02
15. Conditioning			X		MAX	4.5 (9.9)	15	0.03	0:23
16. Stain program	X	WARM	X		MAX	12 (26.5)	-	-	-
17. Bedding program	X	HOT	X	N	MAX	4.5 (9.9)	52	1.67	2:15
18. Allergy program cotton	X	HOT	X	I	MAX	12 (26.5)	103	2.50	2:44
19. Allergy program synthetics	X	HOT	X	S	MAX	4.5 (9.9)	70	1.70	2:42
20. Quick Pro	X	WARM	X	N	MAX	4 (8.8)	40	0.50	0:59
21. Rinse			X	N	MAX		30	0.06	0:29
22. Spin				-	MAX		-	0.06	0:17
23. Drain				-			-	0.01	0:01
24. Drum cleaning				N	MAX		-	-	-

▫ ECO=Green Mode
❄ Cold wash
* Half load
**Agitation level (I = Intensive rhythm, N = Normal rhythm, E = Extra sensitive rhythm, S = Sensitive rhythm, H = Hand wash rhythm)
[1] Test program for connection to cold water supply, pursuant to EN 60456.
[2] 40 °C program for testing institutes. The 40 °C option has to be set.

The above table includes several examples of the use of energy, water, and time for several different program settings. Actual consumption or duration may vary depending on the water pressure, water hardness, water inlet temperature, room temperature, weight and type of load, changes in power supply, and selected options or settings. In the examples specified here, the draining is set to Normal and no additional options are selected.

Maximum or nominal load applies to laundry prepared pursuant to the IEC 60456 standard.

Adjustment of the displayed washing time

Advanced technology allows the appliance to sense the amount of laundry and add the required amount of water during the washing process. Depending on the washing load, washing time can be longer or shorter and the time displayed will be adjusted accordingly.

Moreover, displayed washing time may change due to differences in inlet water temperature. At low inlet water temperatures, washing time can be longer; at higher temperatures, it can be shorter.

Unevenly distributed laundry or lumps of laundry in the washing machine drum can cause problems such as vibration and noisy operation. The appliance can sense such lumps and will try to redistribute the laundry. Smaller loads (e.g. one towel, one sweater, one bathrobe etc.) or clothes made of materials with special geometrical properties are virtually impossible to distribute evenly across the washing machine drum (slippers, large items etc.). This results in several attempts to redistribute the laundry, which in turn leads to longer program duration.

TABLE: WASHING MODE/TEMPERATURE

Program	Washing mode					
	Normal	Green	Speed	Allergy	Night	Intense
1. Everyday wash	cold, warm, hot, extra hot	warm, hot, extra hot	cold, warm, hot, extra hot	warm, hot, extra hot	cold, warm, hot, extra hot	warm, hot, extra hot
2. Standard cotton	cold, warm, hot, extra hot	warm, hot, extra hot	cold, warm, hot, extra hot		cold, warm, hot, extra hot	warm, hot, extra hot
3. Mix/Synthetics	cold, warm, hot	warm, hot	cold, warm, hot	warm, hot	cold, warm, hot	warm, hot
4. Wool/Hand wash	cold, warm		cold, warm			
5. Dark wash	cold, warm		cold, warm	warm	cold, warm	warm
6. Time program	cold, warm, hot					
7. Auto program	cold, warm, hot, extra hot					
8. Quick program	cold, warm, hot, extra hot					
9. Heavy	cold, warm, hot, extra hot			warm, hot, extra hot	cold, warm, hot, extra hot	
10. Easy care	cold, warm, hot	warm, hot	cold, warm, hot	warm, hot	cold, warm, hot	warm, hot
11. Jeans	cold, warm		cold, warm	warm	cold, warm	warm
12. Shirts program	cold, warm		cold, warm		cold, warm	
13. Sanitize	hot, extra hot				hot, extra hot	
14. Sportswear	warm					
15. Conditioning						
16. Stain program	warm, hot, extra hot					
17. Bedding program	warm, hot, extra hot		warm, hot, extra hot		warm, hot, extra hot	warm, hot, extra hot
18. Allergy program cotton	warm					
19. Allergy program synthetics	hot, extra hot					
20. Quick Pro	hot					
21. Rinse						
22. Spin						
23. Drain						
24. Drum cleaning						

❄ Cold wash

TABLE OPTIONS

Program	Options					
	Spinning speed (rpm)	Super Rinse	Prewash	High water level	Anti-crease	Start delay
1. Everyday wash	Max	✓	✓	✓	✓	✓
2. Standard cotton	Max	✓	✓	✓	✓	✓
3. Mix/Synthetics	Max	✓	✓	✓	✓	✓
4. Wool/Hand wash	Max	✓	✓	✓	✓	✓
5. Dark wash	Max	✓	✓	✓	✓	✓
6. Time program	Max				✓	
7. Auto program	Max	✓	✓		✓	✓
8. Quick program	Min	✓	✓	✓	✓	✓
9. Heavy	Max	✓		✓	✓	✓
10. Easy care	Max	✓	✓	✓	✓	✓
11. Jeans	Max	✓	✓	✓	✓	✓
12. Shirts program	Max	✓	✓	✓	✓	✓
13. Sanitize	Max	✓	✓	✓	✓	✓
14. Sportswear	Max	✓	✓	✓	✓	✓
15. Conditioning	Max	✓		✓	✓	✓
16. Stain program	Max	✓			✓	✓
17. Bedding program	Max	✓	✓	✓	✓	✓
18. Allergy program cotton	Max	✓	✓		✓	✓
19. Allergy program synthetics	Max	✓	✓		✓	✓
20. Quick Pro	Max	✓	✓		✓	✓
21. Rinse	Max	✓		✓	✓	✓
22. Spin	Max					✓
23. Drain	/					✓
24. Drum cleaning	/					✓

✓ Option (setting) available on Program

DISPOSAL

Disposal / recycling of packaging

Our product packaging is made of environmentally friendly materials that can be recycled, disposed of, or destroyed without any hazard to the environment. To this end, packaging materials are labelled appropriately.

The symbol on the product or its packaging indicates that the product should not be treated as normal household waste. The product should be taken to an authorized collection centre for waste electric and electronic equipment processing.

When disposing of an appliance at the end of its useful life, remove all power cords and destroy the door latch and switch to prevent the door from locking or latching (child safety).

Correct disposal of the product will help prevent any negative effects on the environment and health of people which could occur in case of incorrect product removal. For detailed information on removal and processing of the product, please contact the relevant authority in charge of waste management, your waste disposal service, or the store where you bought the product.

QUICK GUIDE

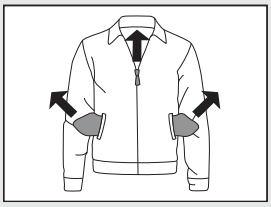

1. SORT THE LAUNDRY.

Close the zippers.
Empty the pockets and turn them inside out.
Check the laundry care symbols.
Sort the laundry based on how heavily soiled it is, by colour, and by material.

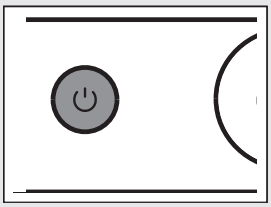

2. SWITCH ON THE MAIN ON/OFF SWITCH (ON/OFF)

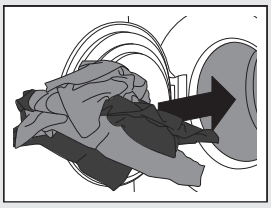

3. OPEN THE WASHING MACHINE DOOR AND INSERT THE LAUNDRY.

Before doing so, make sure the drum is empty.

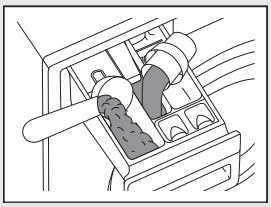

4. ADD THE DETERGENT AND THE CONDITIONER.

Recommended detergent amount is usually indicated on the packaging.
For smaller wash loads, use a smaller amount of detergent.
See chapter "SPECIAL FEATURES" for ADS settings.

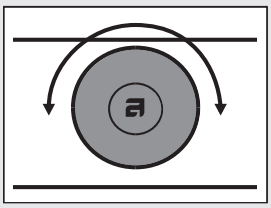

5. CHOOSE THE WASHING PROGRAM.

Turn the program selector knob to the desired washing program.
Selected program will be indicated on the display unit.

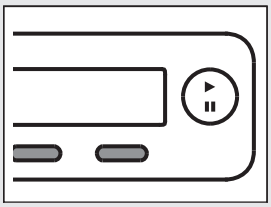

6. CHOOSE THE PROGRAM SETTING.

Choose the settings by pressing the relevant buttons.

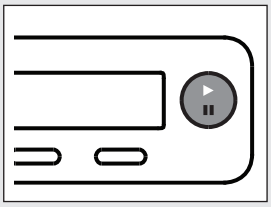

7. CLOSE THE WASHING MACHINE DOOR AND PRESS THE ”START” BUTTON.

Anticipated washing time, in hours and minutes, will be indicated on the display.

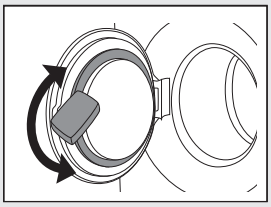

8. END OF PROGRAM

Open the door and remove the laundry from the washing machine.
See chapter "CLEANING AND MAINTENANCE".
Close the door.
Switch off the main on/off switch.
Close the water tap and remove the power plug from the power socket.

We reserve the right to modifications.

ASKO

www.askona.com

WM85.2 US/CA

MIX
Paper from responsible sources
FSC® C114278

576417 en (08-19)