Installation Instructions

30" Electric, 30" Induction Range
30", 36" All Gas Range
30", 36", 48" Dual Fuel Range

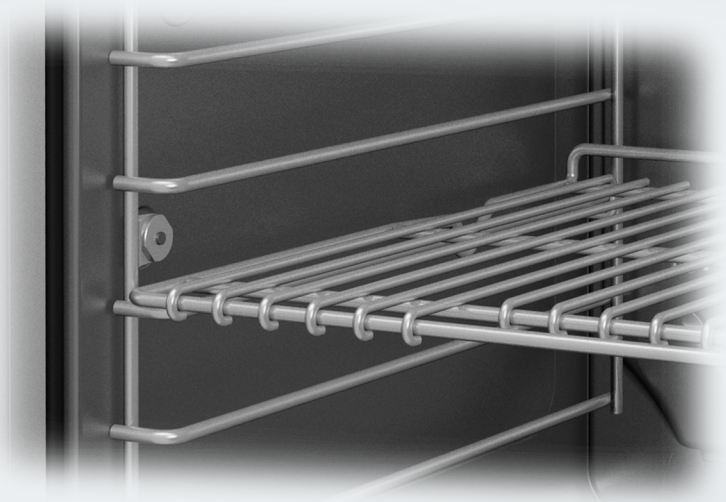

To prevent accidents and damage to the range, you **must** read all instructions supplied before installing or using the appliance.

en-US, CA

M.-Nr. 10 876 460

IMPORTANT SAFETY INSTRUCTIONS

⚠ WARNING
Children and adults can tip over the range if has not been secured. This may lead to fatal injuries.

▶ This range must be secured and connected using the anti-tip device according to the installation instructions.

▶ If you have moved the range, slide the locking latch onto the anti-tip device until you feel it lock into place.

▶ Do not use the range if the anti-tip device has not been properly installed and engaged.

▶ Failure to observe the information contained in the installation instructions can lead to serious or fatal injuries for children and adults.

IMPORTANT SAFETY INSTRUCTIONS

⚠ WARNING: If the information in this manual is not followed exactly, a fire or explosion may result causing property damage, personal injury, or death.

- Do not use or store gasoline or other combustible liquids or vapors in the vicinity of this or any other appliance.
- WHAT TO DO IF YOU SMELL GAS
  - Do not try to light any appliance.
  - Do not touch any electric switches.
  - Do not use any phones inside your building.
  - Immediately call your gas supplier from a neighbor's phone. Follow the gas supplier's instructions.
  - If you are unable to reach your gas provider, call the fire department.
- Installation and service must be performed by a qualified installer, qualified service agency or your gas provider.
  (In Massachusetts, installation must be performed by a licensed installer / gas fitter.)
- Note to the installer:
  Please give these installation instructions to the consumer for the local electrical/gas inspector.

Contents

IMPORTANT SAFETY INSTRUCTIONS 2

IMPORTANT SAFETY INSTRUCTIONS 7

Notes on installation 15
Model numbers 15
Data plate 15
Distance to the range hood 15
Items included with this range 15
Toe-kick and drip tray 16
Installation of the toe-kick 16
Installation of the drip tray 16
Assembling the grill 17
Optional accessories 18
RBGAG All Gas Backguard/RBGDF Dual Fuel Backguard 18
RBS Backsplash 21
XKM 3000 W Remote Vision (USA Only) 21
Required connections 23

All Electric Range dimensions 24
HR 1421; HR 1622 24
Detailed views of HR 1421 26
Detailed views of HR 1622 30

All Gas Range dimensions 34
All Gas Range HR 1124 with Standard Burner Configuration M Pro Power Plus . 34
All Gas Range HR 113x with Standard Burner Configuration M Pro Power Plus . 36
All Gas Range HR 113x with BTU reducing nozzle configuration (M Pro Power Zero Gap Kit, M Pro - décor hood) 39
Detailed views of HR 1124 42
Detailed views of HR 1134 46
Detailed views of HR 1135 50
Detailed views of HR 1136 54

Dual Fuel Range dimensions 58
Dual Fuel Range HR 1724 with Standard Burner Configuration M Pro Power Plus... 58
Dual Fuel Range HR 1924 with Standard Burner Configuration M Pro Power Plus... 60
Dual Fuel Range HR 193x/195x with Standard Burner Configuration M Pro Power Plus 62
Dual Fuel Range HR 193x with BTU reducing nozzle configuration (M Pro Power Zero Gap Kit, M Pro - Décor Hood) 66

Contents

Dual Fuel Range HR 195x with BTU reducing nozzle configuration
M Pro Power Zero Gap Kit 69
Detailed views of HR 1724 71
Detailed views of HR 1924 75
Detailed views of HR 1934 79
Detailed views of HR 1935 83
Detailed views of HR 1936 87
Detailed views of HR 1954 91
Detailed views of HR 1955 95
Detailed views of HR 1956 99

Anti-tip device 103
Before installation 103
Checking the installation space 104
Included accessories 106
Installation dimensions of locking bolt 106
Installing the range with the anti-tip device 106
Disconnecting the range from the anti-tip device 110

Electrical connection 111
Data plate 112

Plumbing 113
Notes on connecting to the water supply 113
Attach the stainless steel hose to the range. 114
Connecting to the water supply 114

Gas connection 115

Burner ratings of Standard Burner Configuration 117
Burner ratings for HR 1124 117
Burner ratings for HR 1134 118
Burner ratings for HR 1135 119
Burner ratings for HR 1136 120
Burner ratings for HR 1724 121
Burner ratings for HR 1924 121
Burner ratings for HR 1934 121
Burner ratings for HR 1935 122
Burner ratings for HR 1936 122
Burner ratings for HR 1954 123
Burner ratings for HR 1955 123
Burner ratings for HR 1956 124

Burner ratings of M Pro Power (Zero Gap) 125

Contents

Burner ratings of M Pro (Décor Hood) 126

Possible combinations - Range with BTU Reducing jet kit..... 127

Caring for the environment 128

IMPORTANT SAFETY INSTRUCTIONS

When using the appliance, follow basic safety precautions, including the following:

Read all instructions before installation and use of the range to prevent accidents and machine damage.

This range complies with current safety requirements. However, improper use of the appliance can result in personal injury or damage to property.

Please read the installation instructions carefully before installing and connecting the appliance.
Read the operating instructions before using the range for the first time. To prevent accidents and damage to the appliance, always observe both the installation instructions and operating instructions. Both documents contain important information about installation, safety, use and maintenance.
Miele cannot be held liable for damage occurring as a result of non-compliance with the instructions.

Keep these installation instructions and operating instructions in a safe place and pass them on to any future owner.

IMPORTANT SAFETY INSTRUCTIONS

Use

▶ This range is intended for domestic use and use in other similar environments.

▶ This appliance is not intended for outdoor use.

▶ Use the range exclusively under normal domestic conditions:

– Use the oven for baking, roasting, broiling, defrosting, canning and drying food.

– Use the stovetop to prepare food and keep it warm.

Any other use is not permitted.

▶ Risk of Fire! Do not use this oven to store or dry combustible materials.

▶ Persons who lack physical, sensory or mental abilities, or experience with the appliance should not use it without supervision or instruction by a responsible person.

Children

▶ Children must be kept away from the range unless constantly supervised.

▶ Please supervise any children in the vicinity of the range and do not let them play with the appliance.

▶ Burn hazard from improper use! Do not allow children to operate the oven.

▶ Danger of suffocation! Ensure that any plastic wrappings, bags, etc. are disposed of safely and kept out of the reach of children.

▶ Burn hazard!
Keep the spaces above and behind the range clear of any items that could draw the attention of children. Otherwise, they can be tempted into climbing onto the appliance.

▶ Danger of injury. Never allow children to hang or lean on any part of the appliance.

IMPORTANT SAFETY INSTRUCTIONS

Technical safety

▶ Installation, repair and maintenance work should be performed by a Miele authorized service technician in accordance with national and local safety regulations and the provided installation instructions. Contact Miele's Technical Service Department for examination, repair or adjustment. Repairs and other work by unauthorized persons could be dangerous and may void the warranty.

▶ Do not carry or lift the range by the oven door handle or the control panel!

▶ Check whether the anti-tip device is properly installed and locked into place (see"Anti-tip device"):

– The anti-tip device must be fastened to the floor or wall with suitable screws.
– You must be able to feel that the locking latch is engaged in the bolt of the anti-tip device.

▶ Slide the range's locking latch into place on the anti-tip device. The locking latch must be noticeably engaged with the bolt of the anti-tip bracket.

▶ A damaged range can be dangerous. Always check for visible signs of damage. Never use a damaged appliance.

▶ Reliable and safe operation of the range can only be guaranteed if it is connected to the public power supply.

▶ The electrical safety of the range can only be guaranteed when it is properly grounded. Compliance with this essential safety requirement is absolutely mandatory. If in any doubt, please have the building's wiring system inspected by a qualified electrician.

▶ To avoid damaging the range, make sure that the connection data (voltage and frequency) on the data plate correspond to the building's power supply before connecting the appliance.
When in doubt, consult a qualified electrician.

▶ During installation, maintenance and repair work, e.g. if the oven lighting is broken, the range must be completely disconnected from the household electricity supply (see"Frequently asked questions"). The gas inlet valve must be closed. It is only completely isolated from the supply when:

- The circuit breakers have been switched off, or
- the fuses of the electrical installation have been completely removed, or
- the plug (if present) is removed from the socket. To do this, pull the plug not the cord.
- Shut off the gas supply and disconnect the range from the gas supply. Installation and maintenance of the gas connection must be performed by qualified installers, service agencies or gas providers.

▶ Do not use a power strip or extension cord to connect the range to electricity. These are a fire hazard and do not guarantee the required level of appliance safety.

▶ Any contact with live connections or tampering with the electrical or mechanical components of the range will endanger your safety and may lead to appliance malfunctions.
Do not open the appliance housing under any circumstances.

IMPORTANT SAFETY INSTRUCTIONS

▶ This appliance must not be installed and operated in mobile installations (e.g. on a ship).

▶ Any repairs not performed by a Miele authorized service technician will void the warranty.

▶ Defective components should be replaced by Miele original parts only. Only with these parts can the manufacturer guarantee the safety of the appliance.

▶ Risk of electric shock! If the ceramic surface of the stovetop is defective or chipped, cracked or broken in any way, immediately switch the stovetop off and do not continue to use it. Disconnect the range from the power supply and contact Miele Technical Service.

▶ In order for the range to function properly, it requires an adequate supply of cool air. Ensure that the air flow is not impaired. Also be sure that the cool air supply is not excessively heated by other heat sources (e.g. solid fuel stoves).

▶ If the range is installed behind a cabinet door, do not close the door while the appliance is in operation. Heat and moisture can build up behind the closed door and cause damage to the range and to the surrounding cabinets and flooring. Do not close the door until the appliance has completely cooled down.

▶ Reaching over a hot cooktop to access the cabinets can result in burns. You can reduce the risk of burns by installing a range hood that extends at least 4 3/4" (12 cm) past the bottom of the cabinets.

▶ The water shutoff valve must be accessible after the range has been installed.

▶ The integrated Waterproof System offers protection against water damage if the following conditions are met:

– The range is properly installed (connected to electric and water supply).

– The range is repaired immediately whenever damage is detected.

– The water supply is shut off during extended periods of non-use (e.g. vacation).

▶ Hard water, water containing minerals and water from reverse osmosis filtering systems can damage the range. Only use filtered, softened and demineralized water from the building's plumbing to supply the range.

Preparing your appliance for an extended vacation

▶ If you elect to turn off the water to your home for an extended period of time, please note that this may not be enough to reduce the risk of a leak. To be completely safe, you must turn off the water supply to each individual appliance.

IMPORTANT SAFETY INSTRUCTIONS

Cleaning and care

▶ The steam from a steam cleaning appliance could reach live electrical components and cause a short circuit.
Do not use a steam cleaner to clean the range.

▶ Only clean parts listed in these Operating and Installation Instructions.

▶ Scratches on the door glass can cause the glass to break.
Do not use abrasive cleaners, hard sponges, brushes or sharp metal tools to clean the door glass.

▶ The shelf runners can be removed for cleaning purposes (see "Cleaning and care"). Ensure they are correctly fitted after cleaning and never operate the oven without the shelf runners inserted.

▶ There is a seal around the oven interior which seals the inside of the door. Take care not to rub, damage or move the gasket.

▶ Do not use oven cleaners. Commercial oven cleaners or oven liners of any kind should not be used in or around any part of the oven.

▶ Debris should be removed before running the Self Clean program. If not removed this debris can smoke causing the self-cleaning program to turn itself off.

SAVE THESE INSTRUCTIONS AND REVIEW THEM PERIODICALLY

Model numbers

A list of the ovens described in these operating instructions can be found on the back page.

Data plate

The data plate is behind the toe-kick. The toe-kick cover is attached to the base of the range by magnets so it can be removed and put back again easily.

There you can find the model number, the serial number and the connection data (voltage/frequency/maximum rated load) for your range.

Have this information available when contacting Miele Technical Service.

Distance to the range hood

The minimum clearance between the appliance and a range hood above will be listed by the hood manufacturer.

If there is more than one appliance installed below the range hood, each with a different safety clearance, the largest clearance must be used.

Items included with this range

The range is supplied with:

- Installation Instructions,
- Multiple operating instructions (depending on model) for:
  - Electric Range
  - Induction Range
  - Convection Oven
  - Gas Cooktop
  - Gas Convection Oven
  - Speed Oven
  - Warming Drawer
- an anti-tip device including screws for fastening the range,
- various accessories.

Notes on installation

Toe-kick and drip tray

30" and 36" range
The components are located in the packaging of the range.

48" range
The components are already installed.

Installation of the toe-kick

The toe-kick has sheet metal lugs and magnets by means of which it can be positioned and attached to the base of the range.

- Position the toe-kick in such a way that the sheet metal lugs are facing the provided holes in the base.
- Push the toe-kick onto the base of the range until it audibly locks into place.

Installation of the drip tray

The drip tray covers the gap between the oven cavity and the door.

- Open the oven door.

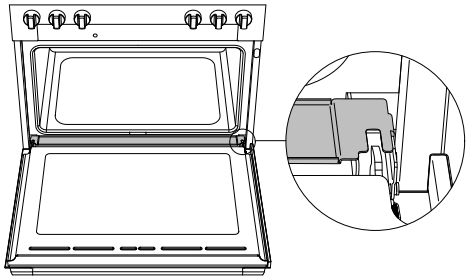

- Lay the drip tray over the gap between the oven cavity and the door.
- Close the oven door.

Assembling the grill

⚠ Burn hazard!
The burners must be turned off and allowed to cool completely.

⚠ Risk of injury!
The cast-iron grill is heavy.
Carry the grill carefully and place it securely on a soft base so that it lies flat.

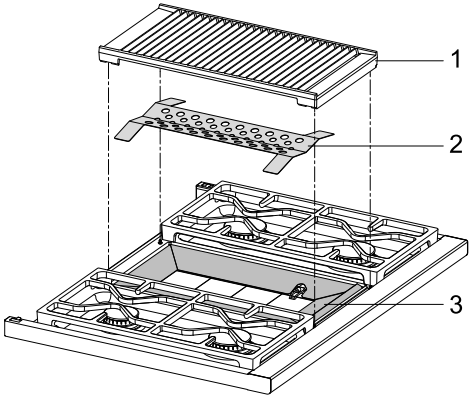

① Grill

② Radiant plate

③ Frame

- Using a soft sponge, clean radiant plate ② with a solution of warm water and a small amount of liquid dish soap. Dry the parts thoroughly after cleaning.
- Remove the grill ① from the gas cooktop.
- Place the radiant plate ② on top of the frame ③.

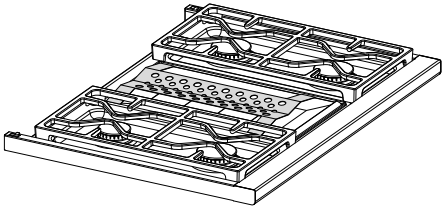

- Place the grill ① into position.

Cleaning and care

Tip: All parts can be disassembled in the reverse order. You can also remove the frame for cleaning.

Optional accessories

All accessories and cleaning products listed in these instructions are designed to be used with the Miele range.

These can be ordered from the Miele website (see end of this booklet for contact details).

When ordering, please have your model number available.

RBGAG All Gas Backguard/RBGDF Dual Fuel Backguard

Depending on the model, you can exchange the existing island trim of your appliance for a larger range backguard. The backguard is available in the following heights: 12" (305 mm) and 20" (508 mm).

Installing the RBGDF Dual Fuel Backguard

The rear of the range must be accessible.

Install the backguard before installing the anti-tip device and connecting of the range.

- Loosen the screws of the island trim.
- Pull back the island trim slightly until it can be removed.

The backguard can be **installed** in reverse order.

Mounting the RBGAG All Gas Backguard

The rear of the range must be accessible.

Mount the backguard before installing the anti-tip device and connecting of the range.

- Loosen the screws of the island trim.
- Pull back the island trim slightly until it can be removed.

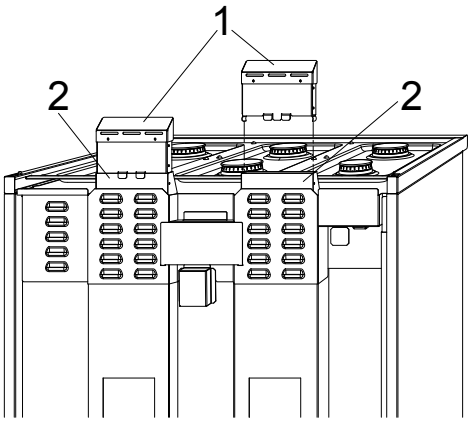

① Extender

② Air ducts

- Insert one extender ① onto each of the left and right air ducts ②.
- Screw the extenders① into place with 2 screws each.

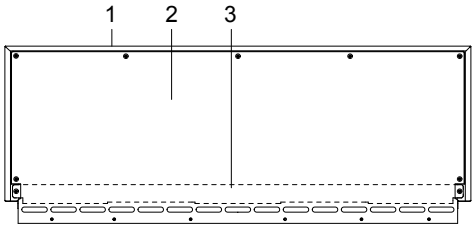

① Backguard

② Rear panel backguard

③ Interior panel

- To avoid scratching the backguard ①, place it front side downwards on a soft surface (e.g., a blanket). The lower edge should line up with the edge of the table so that the backguard is lying flat.
- Remove the screws from the rear of the backguard.
- Remove the rear ② and interior ③ panels.

Notes on installation

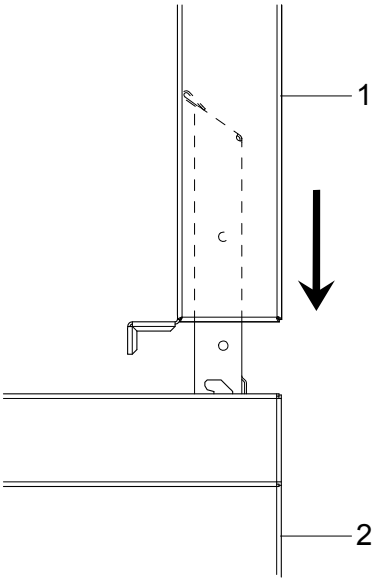

① Backguard

② Range

■ Push the backguard ① over the air duct extensions from above.

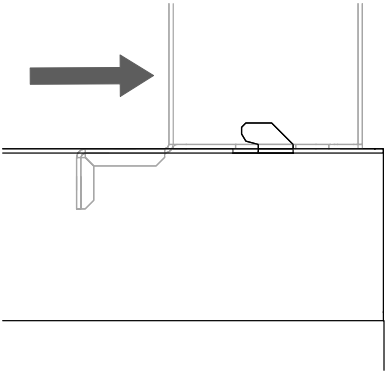

■ As soon as the backguard is sitting on the range, push the backguard backwards.

■ Secure the interior panel and the rear panel to the backguard with the screws supplied.

■ Secure the backguard to the range with the screws supplied.

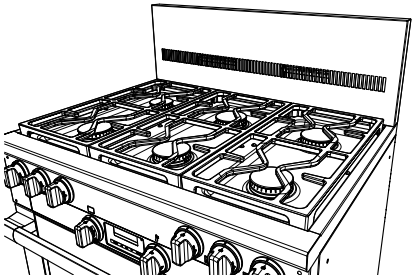

Backguard 12"

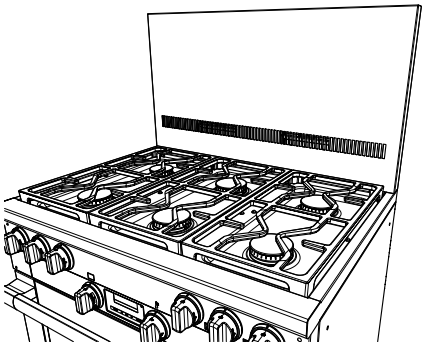

Backguard 20"

RBS Backsplash

The backsplash is intended for installation to a Miele Range Hood (DAR model). Observe the installation instructions of the Miele Range Hood.

XKM 3000 W Remote Vision (USA Only)

Depending on the model, the range maybe compatible with RemoteVision^{TM}.

In order to use the RemoteVision^{TM} monitoring service, you will require a XKM 3000 W Communication Module. Refer to the Operating and Installation Instructions of the Miele XKM 3000 W Communication Module.

Notes on installation

Do not carry or lift the range by the oven door handle or the control panel!

The range is heavy.
Due to the size and weight of the appliance, installation should be performed by two people.

The net weight of the range with accessories is as follows:

Model	Width	Net weight incl. accessories
HR 1421 **HR 1622** **HR 112x** **HR 1724** **HR 192x**	29 15/16" (762 mm)	approx. 307 lbs (140 kg)
HR 113x **HR 193x**	35 15/16" (915 mm)	approx. 405 lbs (180 kg)
HR 195x	47 15/16" (1220 mm)	approx. 573 lbs (260 kg)

Installation location

This appliance is not intended for outdoor use.
Ranges with a connection to the water supply should not be installed in rooms where there is a risk of freezing temperatures.

The floor of the space where the appliance is to be installed must be flat, level and made of a strong, rigid material.

The niche floor must be made of strong, rigid material.

Because the Range is heavy and has to be secured with the anti-tip device supplied, the surface must be able to fully bear the load of the appliance. If necessary, seek the advice of an architect or construction expert.

Ventilation

The air intake and outlet openings must not be covered or blocked in any way.

Required connections

Model	Electrical connection	Gas connection	Plumbed-water connection
HR 1421	**X**	–	–
HR 1622	**X**	–	**X**
HR 112x **HR 113x**	**X**	**X**	–
HR 1724	**X**	**X**	–
HR 192x **HR 193x** **HR 195x**	**X**	**X**	**X**

X Connection required
– Connection not provided

All Electric Range dimensions

HR 1421; HR 1622

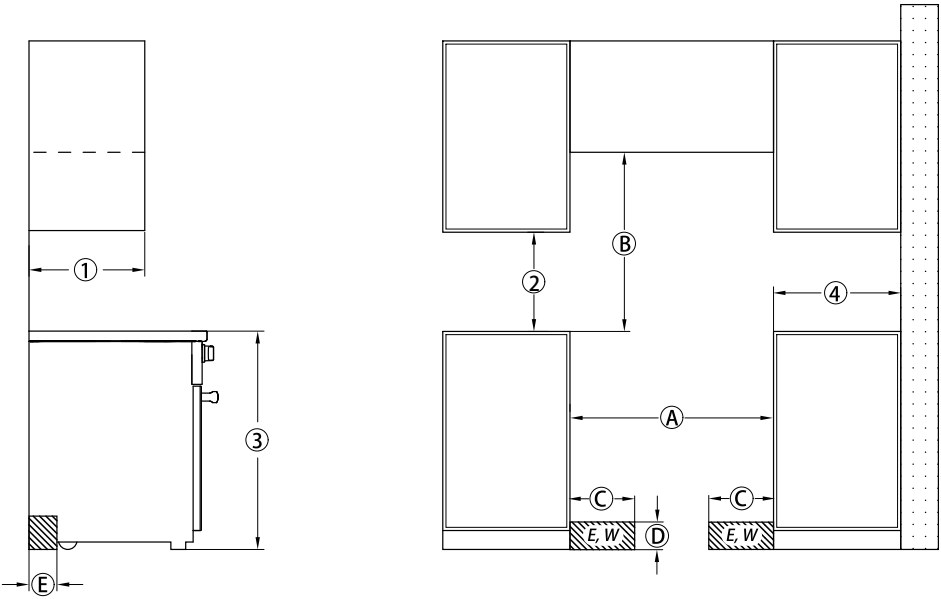

Ⓒ, Ⓓ, Ⓔ The shaded area represents the installation area for the connections:
E = Electrical connection,
W = Water connection (only HR 1622)

HR 1421; HR 1622

Position	Dimensions	Description	
①	13" (330 mm)	Maximum depth of top cabinet	
②	18" (547 mm)	Minimum distance to bottom edge of top cabinet	
③	35 1/2"–37" (901–940 mm)	Distance from the floor to cooktop surface	
Ⓐ	min. 30" (762 mm)	Niche width	
Ⓑ	30" (762 mm)	Minimum distance between the top of the cooking area and the bottom of an unprotected combustible surface.	
	or 24" (609 mm)	Minimum distance to a protected combustible surface or when a Miele Ventilation Hood is installed.	
	For all other hoods please consult the manufacturer's specifications for required distances.		
Ⓒ	approx. 10 1/16" (256 mm)	Maximum connection width right and left	Position of the wall socket
Ⓓ	approx. 4 1/2" (115 mm)	Maximum connection height	
Ⓔ	approx. 2 13/16" (72 mm)	Maximum connection depth	

Please observe safe distances to rear combustible surfaces of 12" (305 mm) clearance. For zero clearance installation the Miele Backguards will satisfy the required distance to combustible surfaces. The Miele Backguard is available in 12" (305 mm) or 20" (508 mm) heights.

All Electric Range dimensions

Detailed views of HR 1421

Side view of HR 1421

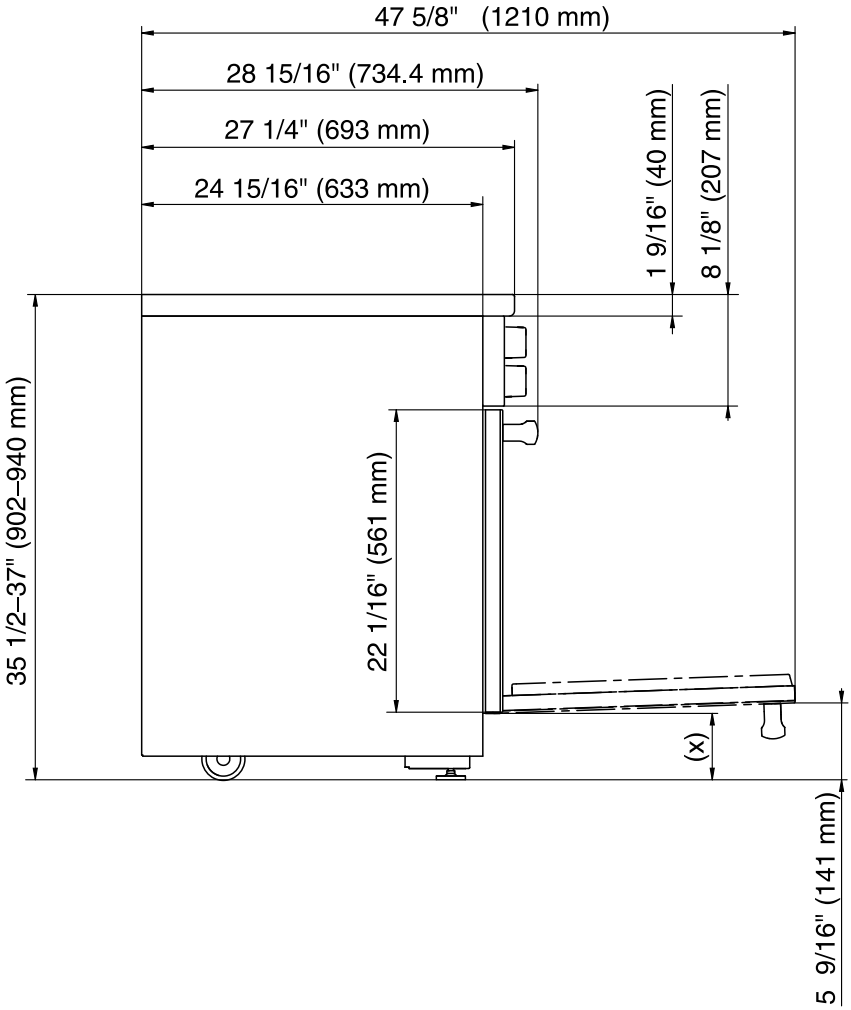

(x) = Depending on the appliance height adjustment
5" - 6 1/2" (127 mm - 165.1 mm)

Detailed front side view of HR 1421

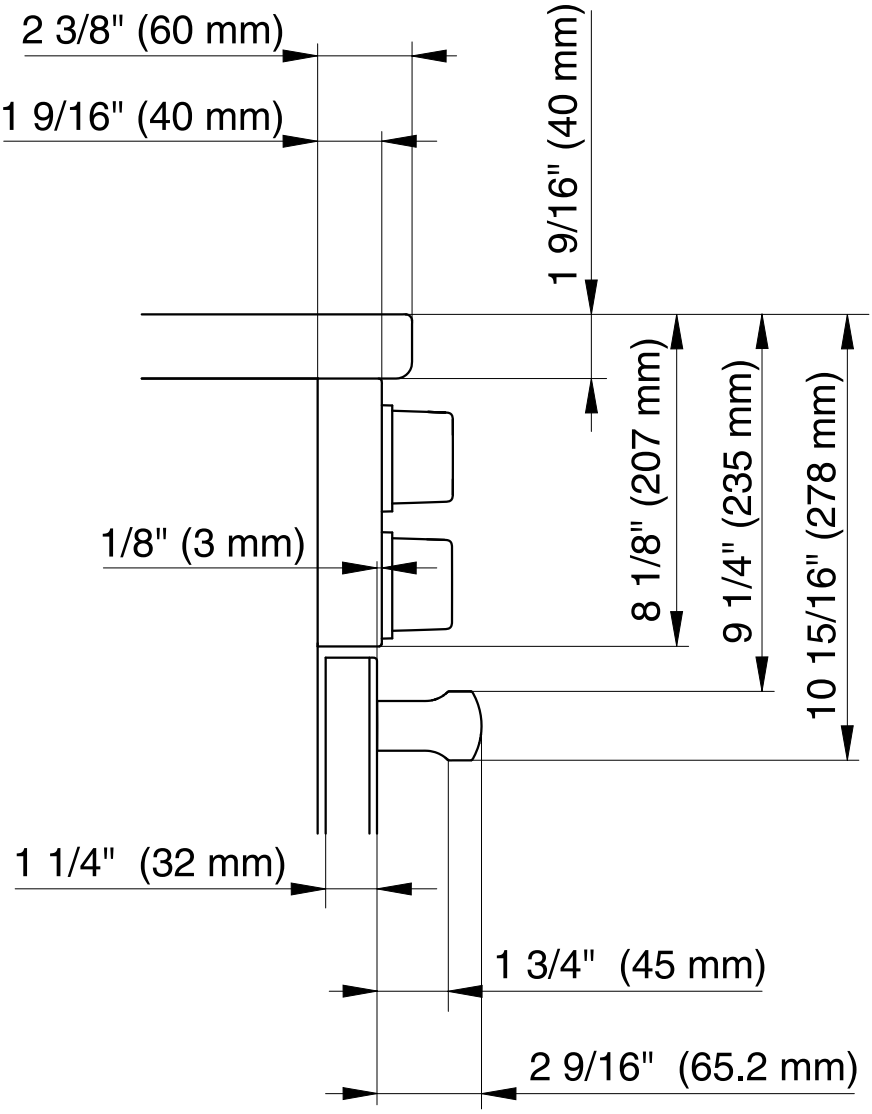

All Electric Range dimensions

Front side view of HR 1421

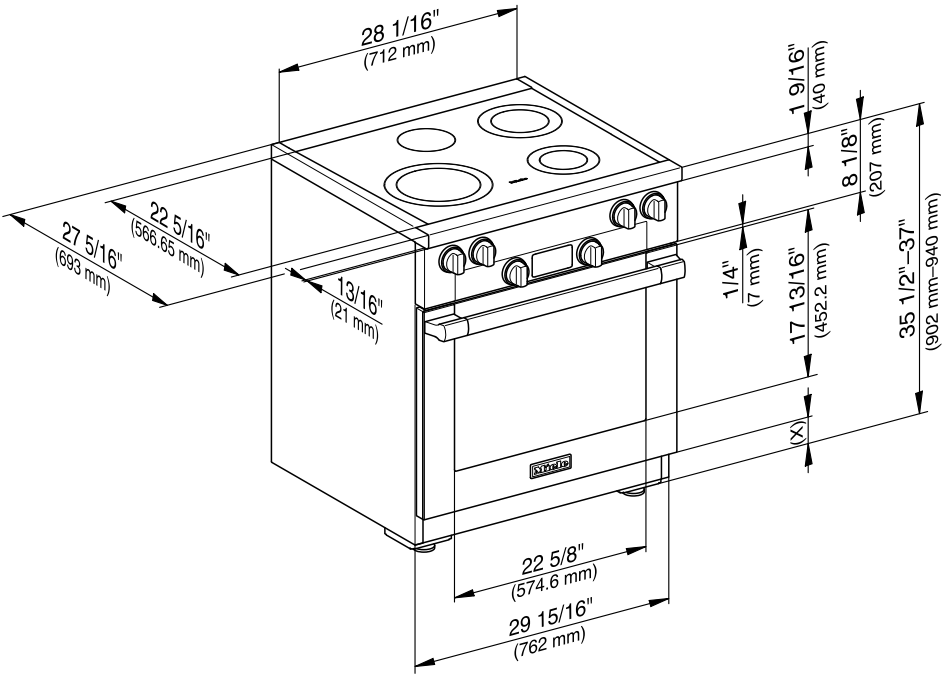

(x) = Depending on the appliance height adjustment
5" - 6 1/2" (127 mm - 165.1 mm)

Rear view of HR 1421

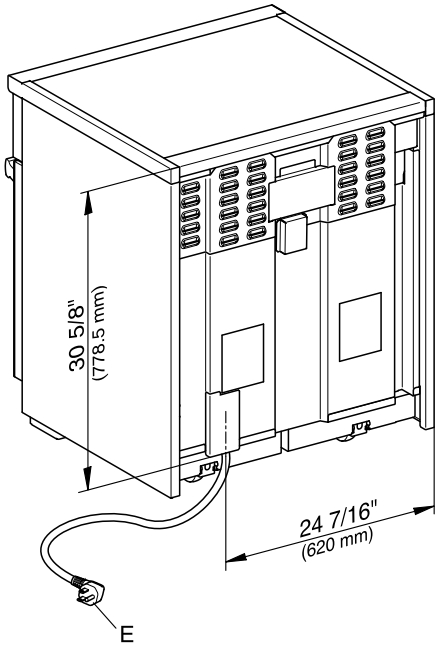

E = Electrical connection

All Electric Range dimensions

Detailed views of HR 1622

Side view of HR 1622

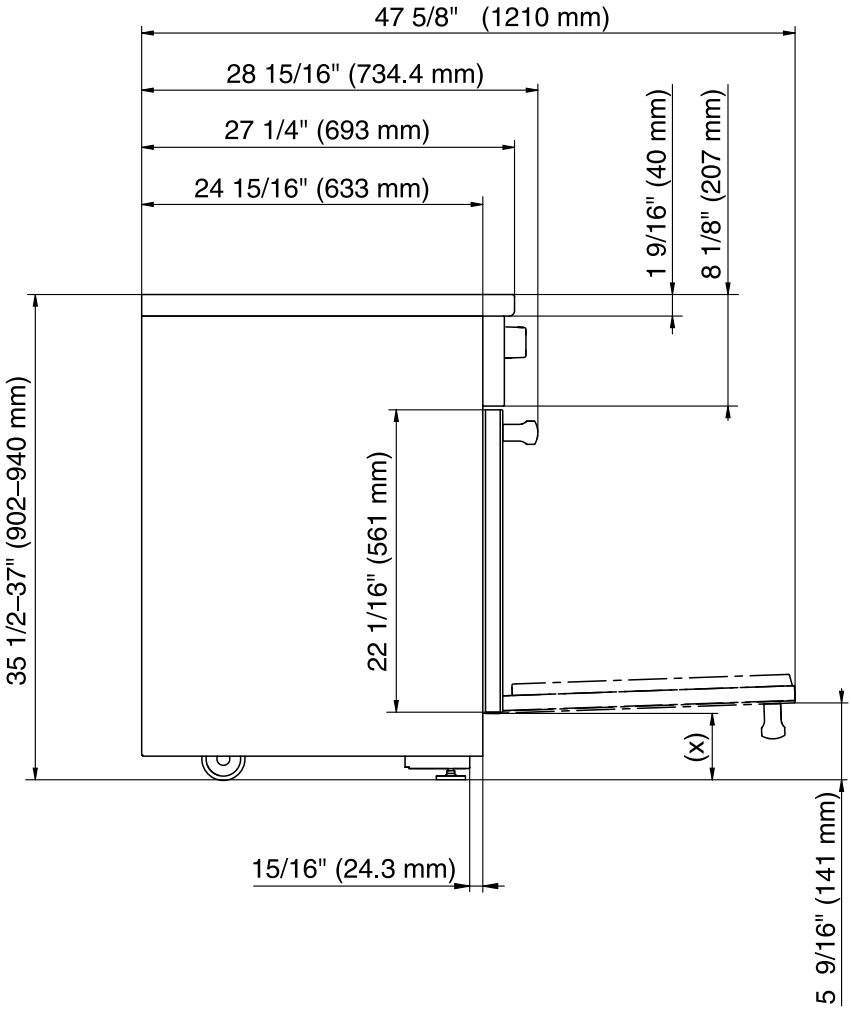

(x) = Depending on the appliance height adjustment
5" - 6 1/2" (127 mm - 165.1 mm)

Detailed front side view of HR 1622

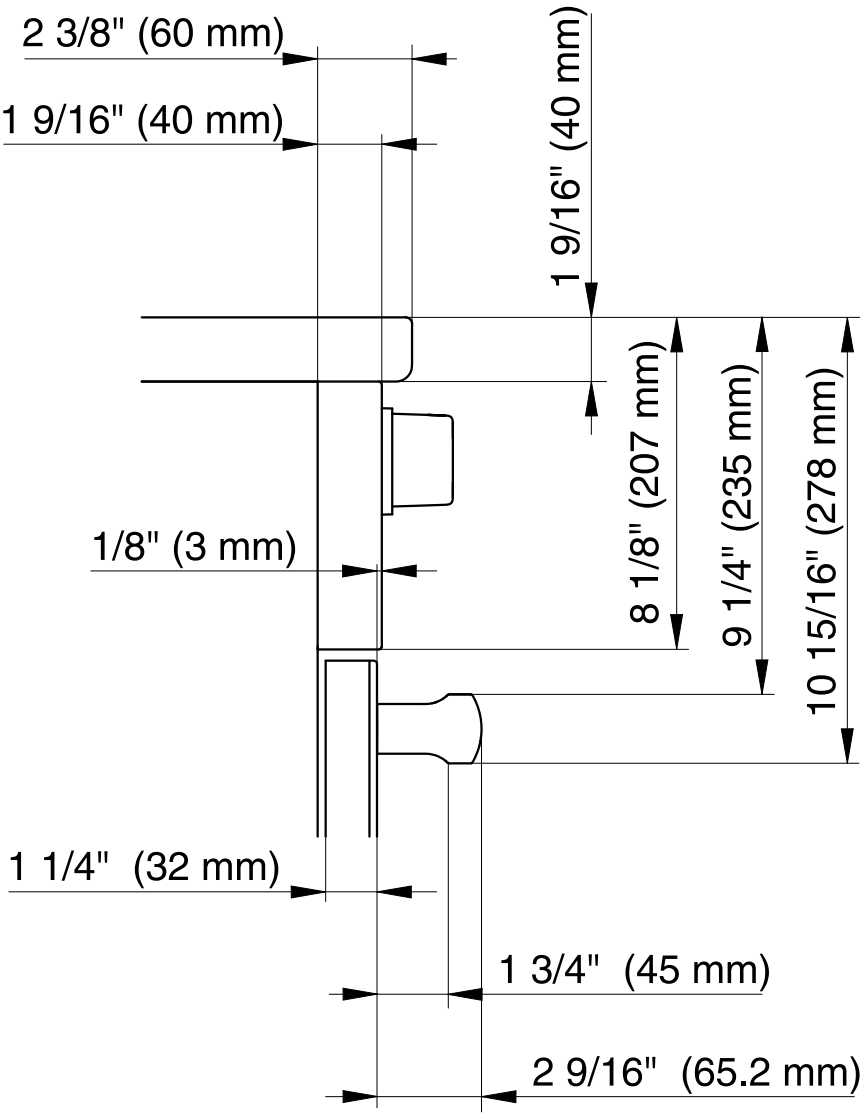

All Electric Range dimensions

Front side view of HR 1622

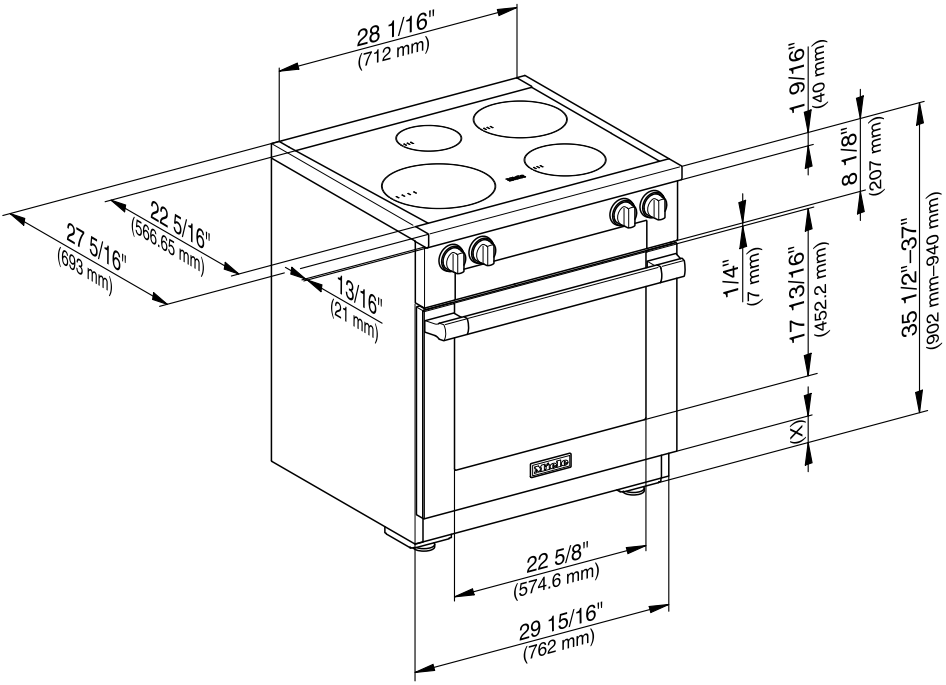

(x) = Depending on the appliance height adjustment
5" - 6 1/2" (127 mm - 165.1 mm)

Rear view of HR 1622

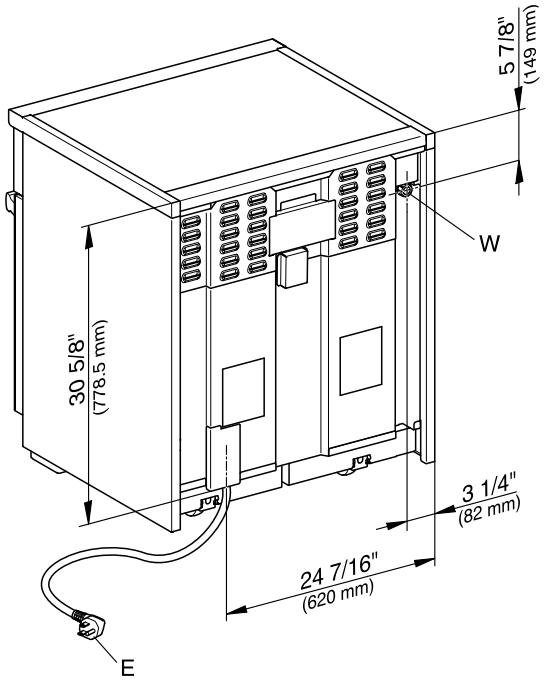

E = Electrical connection

W = Water connection

All Gas Range dimensions

All Gas Range HR 1124 with Standard Burner Configuration M Pro Power Plus

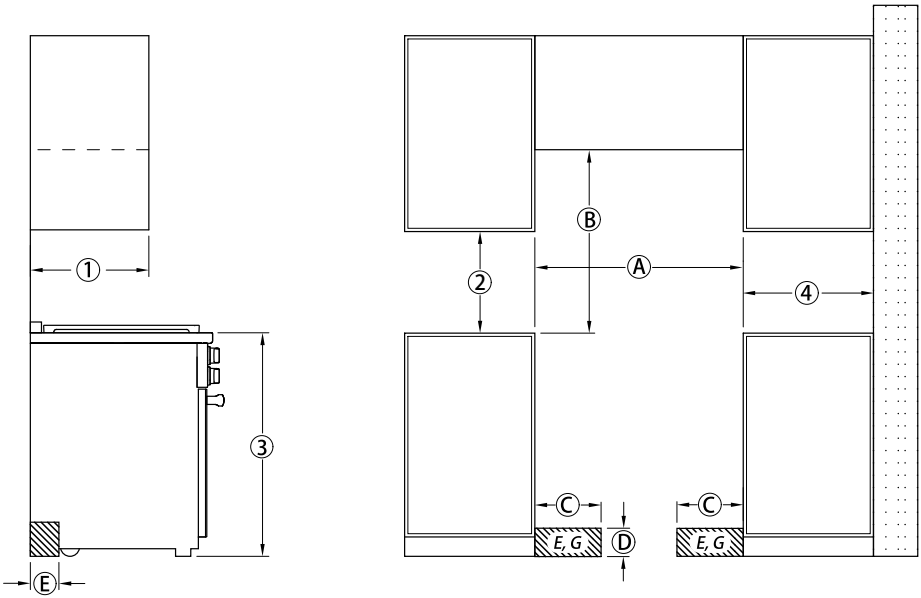

Ⓒ, Ⓓ, Ⓔ The shaded area represents the installation area for the connections:
E = Electrical connection, G = Gas connection

Position	Dimensions	Description
①	13" (330 mm)	Maximum depth of top cabinet
②	18" (457 mm)	Minimum distance to bottom edge of top cabinet
③	35 1/2"–37" (901–940 mm)	Distance from the floor to cooktop surface
④	10" (254 mm)	Minimum distance to combustible surfaces.

Position	Dimensions	Description	
Ⓐ	min. 30" (762 mm)	Niche width	
Ⓑ	37" (940 mm)	Minimum distance between the top of the cooking area and the bottom of an unprotected combustible surface.	
	30" (762 mm)	Minimum distance between the top of the cooking area and the bottom of the Miele Range Hood (DAR model with DRxB XL blower).	
	Refer to the Installation instructions for the Miele ventilation hood, Appliance dimensions (Distance between cooktop and ventilation hood (S)). For all other hoods please consult the manufacturer's specifications for required distances.		
Ⓒ	approx. 10 1/16" (256 mm)	Maximum connection width right and left	Position of the wall socket
Ⓓ	approx. 4 1/2" (115 mm)	Maximum connection height	
Ⓔ	approx. 2 13/16" (72 mm)	Maximum connection depth	

Please observe safe distances to rear combustible surfaces of 12" (305 mm) clearance. For zero clearance installation the Miele Backguards will satisfy the required distance to combustible surfaces. The Miele Backguard is available in 12" (305 mm) or 20" (508 mm) heights.

All Gas Range dimensions

All Gas Range HR 113x with Standard Burner Configuration M Pro Power Plus

HR 1134, HR 1135, HR 1136

If a BTU reducing jet kit is necessary an authorized installer is required to adapt the product in accordance with local codes and standards.

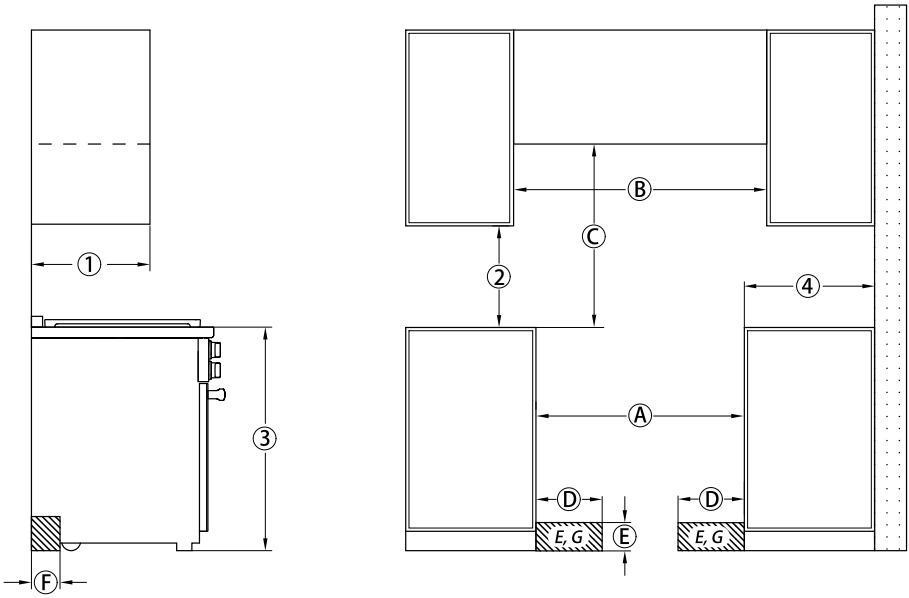

Ⓑ In case of combustible materials, a minimum distance of 6" must be observed on each side in addition to dimension Ⓐ.

Ⓓ, Ⓔ, Ⓕ The shaded area represents the installation area for the connections:
E = Electrical connection, G = Gas connection

Position	Dimensions	Description
①	13" (330 mm)	Maximum depth of top cabinet
②	18" (457 mm)	Minimum distance to bottom edge of top cabinet
③	35 1/2"–37" (901–940 mm)	Distance from the floor to cooktop surface
④	10" (254 mm)	Minimum distance to combustible surfaces.

HR 1134

Position	Dimensions	Description	
Ⓐ	min. 36" (915 mm)	Niche width	
Ⓑ	6" + Ⓐ + 6" (150 mm + Ⓐ + 150 mm)	If combustible materials are present, an additional minimum distance of 6" (150 mm) (each side) is required. Ensure that the local regulations are observed.	
Ⓒ	37" (940 mm)	Minimum distance between the top of the cooking area and the bottom of an unprotected combustible surface.	
	36" (915 mm)	Minimum distance between the top of the cooking area and the bottom of the Miele Range Hood (DAR model with DRxB XL blower).	
	30" (762 mm)	Minimum distance between the top of the cooking area and the bottom of the Miele Range Hood (DAR model with DRxB XXL blower).	
	For all other hoods please consult the manufacturer's specifications for required distances.		
Ⓓ	approx. 13 1/16" (332.5 mm)	Maximum connection width right and left	Position of the wall socket
Ⓔ	approx. 4 1/2" (115 mm)	Maximum connection height	
Ⓕ	approx. 2 13/16" (72 mm)	Maximum connection depth	

Please observe safe distances to rear combustible surfaces of 12" (305 mm) clearance. For zero clearance installation the Miele Backguards will satisfy the required distance to combustible surfaces. The Miele Backguard is available in 12" (305 mm) or 20" (508 mm) heights.

All Gas Range dimensions

HR 1135, HR 1136

Position	Dimensions	Description	
Ⓐ	min. 36" (915 mm)	Niche width	
Ⓑ	6" + Ⓐ + 6" (150 mm + Ⓐ + 150 mm)	If combustible materials are present, an additional minimum distance of 6" (150 mm) (each side) is required. Ensure that the local regulations are observed.	
Ⓒ	37" (940 mm)	Minimum distance between the top of the cooking area and the bottom of an unprotected combustible surface.	
	30" (762 mm)	Minimum distance between the top of the cooking area and the bottom of the Miele Range Hood (DAR model with DRxB XL or DRxB XXL blower).	
	For all other hoods please consult the manufacturer's specifications for required distances.		
Ⓓ	approx. 13 1/16" (332.5 mm)	Maximum connection width right and left	Position of the wall socket
Ⓔ	approx. 4 1/2" (115 mm)	Maximum connection height	
Ⓕ	approx. 2 13/16" (72 mm)	Maximum connection depth	

Please observe safe distances to rear combustible surfaces of 12" (305 mm) clearance. For zero clearance installation the Miele Backguards will satisfy the required distance to combustible surfaces. The Miele Backguard is available in 12" (305 mm) or 20" (508 mm) heights.

All Gas Range HR 113x with BTU reducing nozzle configuration (M Pro Power Zero Gap Kit, M Pro - décor hood)

HR 1134, HR 1135, HR 1136

For Miele Range Hoods and Miele Range-Décor Hoods:

If a BTU reducing jet kit is necessary an authorized installer is required to adapt the product in accordance with local codes and standards. The nozzles are a standard accessory and are changed during installation, see also "Possible combinations - Range with BTU reducing jet kit".

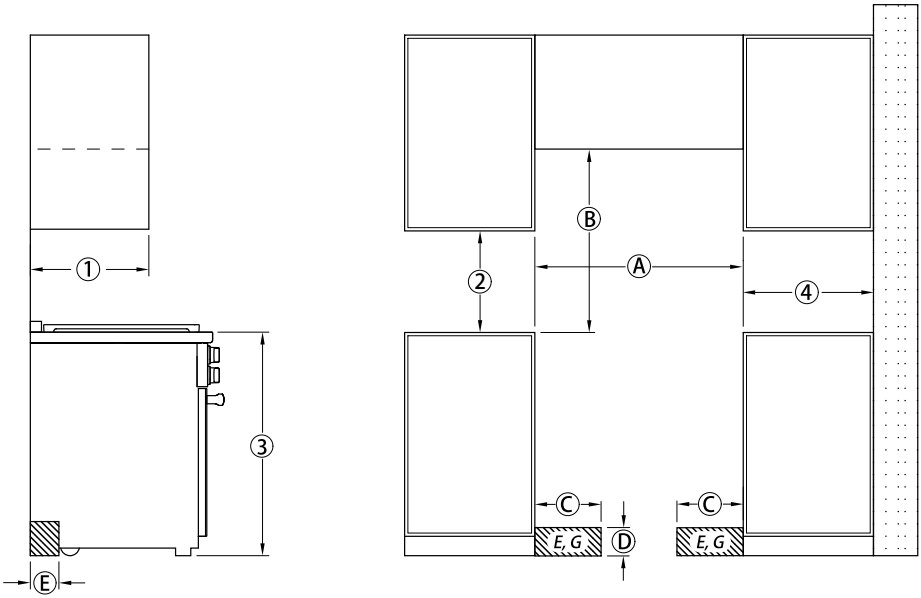

Ⓒ, Ⓓ, Ⓔ The shaded area represents the installation area for the connections:
E = Electrical connection, G = Gas connection

Position	Dimensions	Description
①	13" (330 mm)	Maximum depth of top cabinet
②	18" (457 mm)	Minimum distance to bottom edge of top cabinet
③	35 1/2"–37" (901–940 mm)	Distance from the floor to cooktop surface
④	10" (254 mm)	Minimum distance to combustible surfaces.

All Gas Range dimensions

HR 1134

Position	Dimensions	Description	
Ⓐ	min. 36" (915 mm)	Niche width Please contact Miele Service for more information.	
Ⓑ	37" (940 mm)	Minimum distance between the top of the cooking area and the bottom of an unprotected combustible surface.	
	36" (915 mm)	Minimum distance between the top of the cooking area and the bottom of the Miele Range Hood (DAR model with DRxB XL blower).	
	30" (762 mm)	Minimum distance between the top of the cooking area and the bottom of the Miele Range Hood (DAR model with DRxB XXL blower).	
	Refer to the Installation instructions for the Miele ventilation hood, Appliance dimensions (Distance between cooktop and ventilation hood (S)). For all other hoods please consult the manufacturer's specifications for required distances.		
Ⓒ	approx. 13 1/16" (332.5 mm)	Maximum connection width right and left	Position of the wall socket
Ⓓ	approx. 4 1/2" (115 mm)	Maximum connection height	
Ⓔ	approx. 2 13/16" (72 mm)	Maximum connection depth	

Please observe safe distances to rear combustible surfaces of 12" (305 mm) clearance. For zero clearance installation the Miele Backguards will satisfy the required distance to combustible surfaces. The Miele Backguard is available in 12" (305 mm) or 20" (508 mm) heights.

HR 1135, HR 1136

Position	Dimensions	Description	
Ⓐ	min. 36" (915 mm)	Niche width Please contact Miele Service for more information.	
Ⓑ	37" (940 mm)	Minimum distance between the top of the cooking area and the bottom of an unprotected combustible surface.	
	30" (762 mm)	Minimum distance between the top of the cooking area and the bottom of the Miele Range Hood (DAR model with DRxB XL or DRxB XXL blower).	
	Refer to the Installation instructions for the Miele ventilation hood, Appliance dimensions (Distance between cooktop and ventilation hood (S)). For all other hoods please consult the manufacturer's specifications for required distances.		
Ⓒ	approx. 13 1/16" (332.5 mm)	Maximum connection width right and left	Position of the wall socket
Ⓓ	approx. 4 1/2" (115 mm)	Maximum connection height	
Ⓔ	approx. 2 13/16" (72 mm)	Maximum connection depth	

Please observe safe distances to rear combustible surfaces of 12" (305 mm) clearance. For zero clearance installation the Miele Backguards will satisfy the required distance to combustible surfaces. The Miele Backguard is available in 12" (305 mm) or 20" (508 mm) heights.

All Gas Range dimensions

Detailed views of HR 1124

Side view of HR 1124

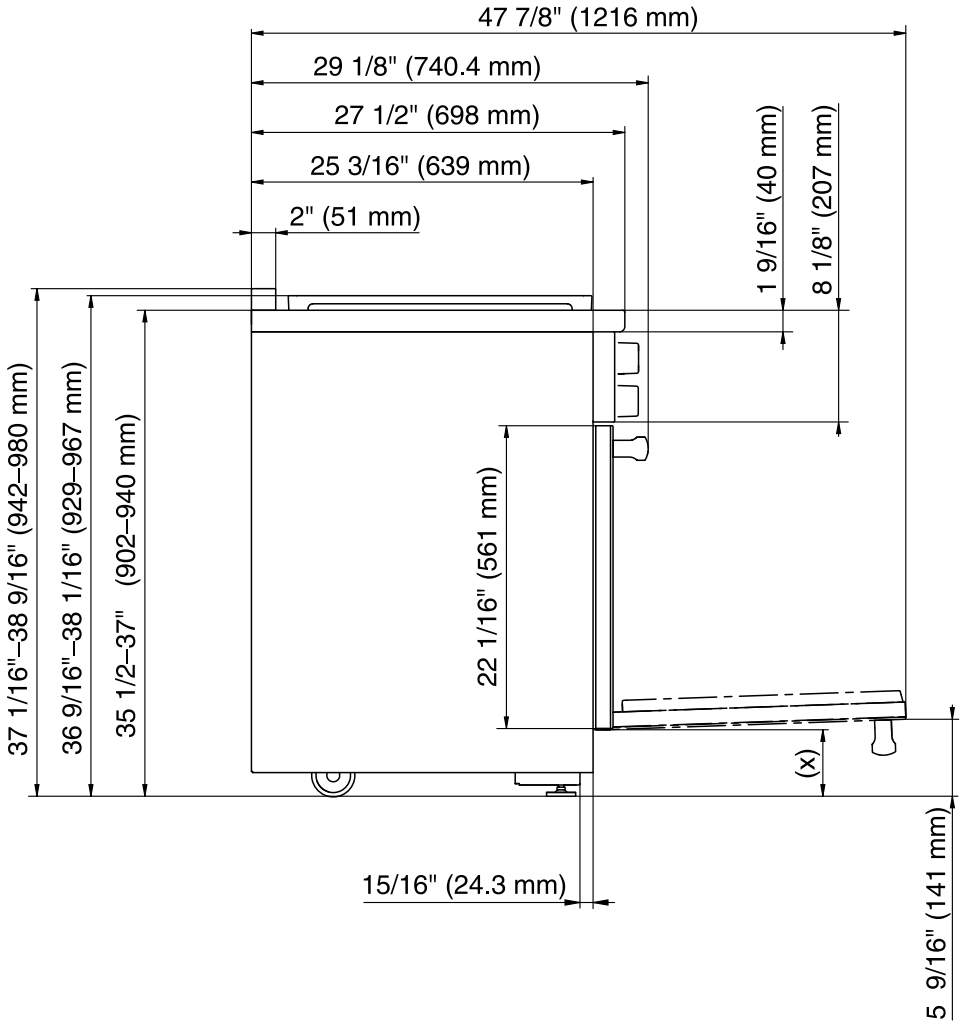

(x) = Depending on the appliance height adjustment: 5" - 6 1/2" (127 mm - 165.1 mm)

Detailed front side view of HR 1124

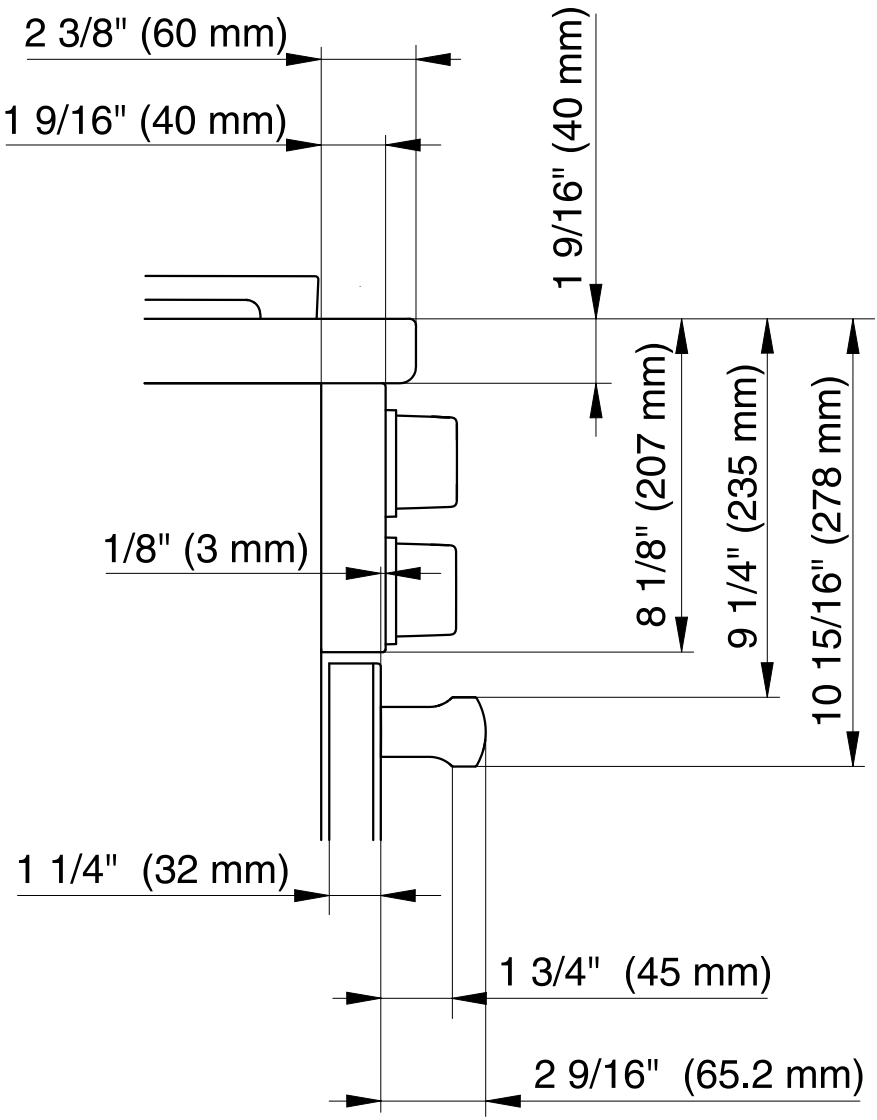

All Gas Range dimensions

Front side view of HR 1124

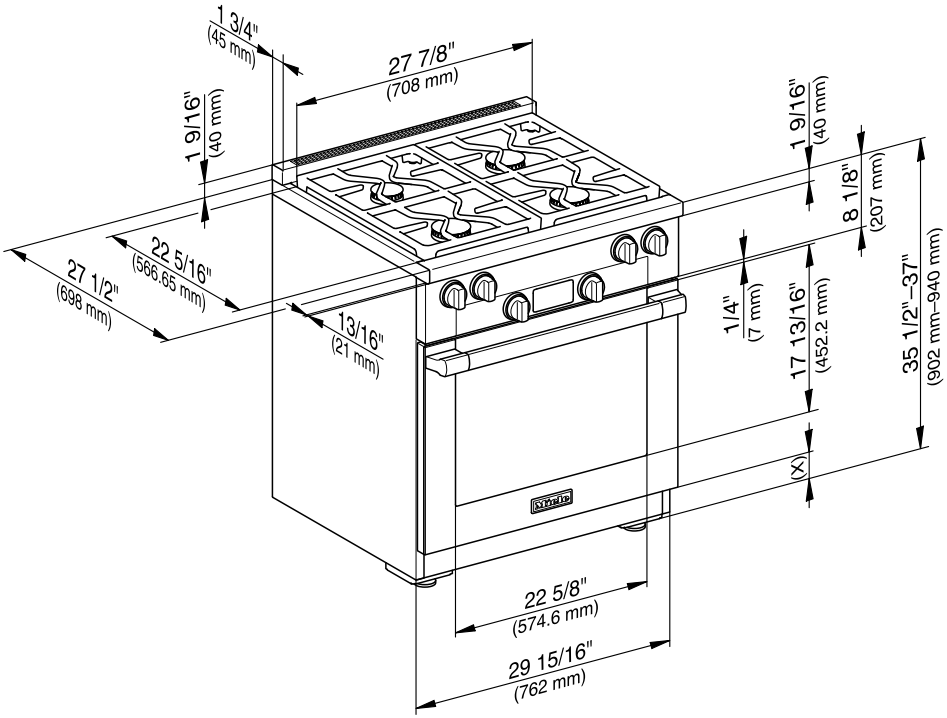

(x) = Depending on the appliance height adjustment: 5" - 6 1/2" (127 mm - 165.1 mm)

Rear view of HR 1124

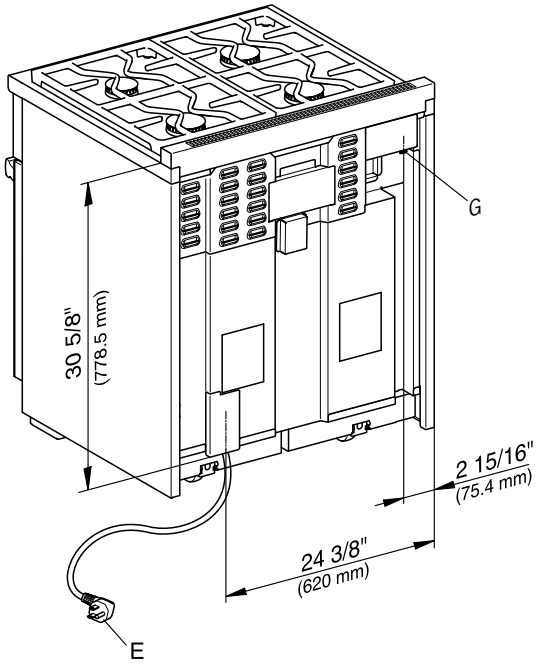

E = Electrical connection

G = Gas connection

All Gas Range dimensions

Detailed views of HR 1134

Side view of HR 1134

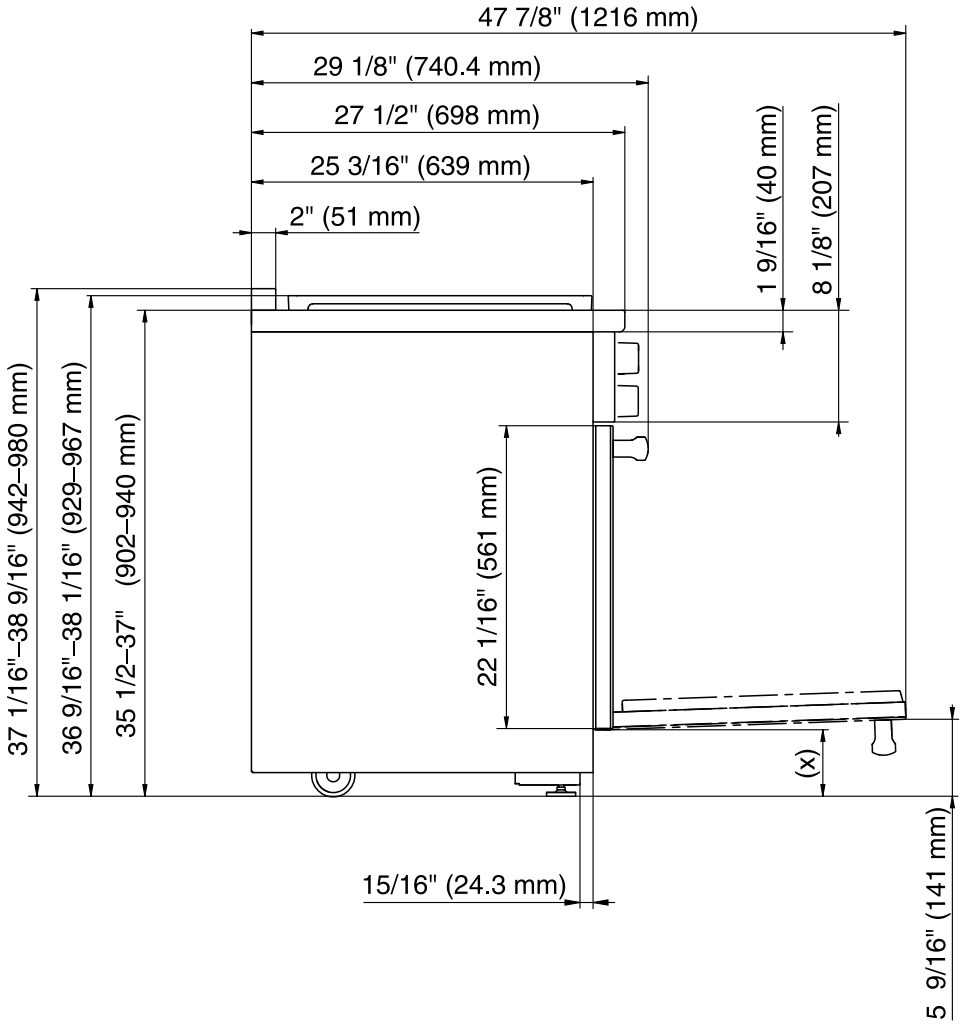

(x) = Depending on the appliance height adjustment: 5" - 6 1/2" (127 mm - 165.1 mm)

Detailed front side view of HR 1134

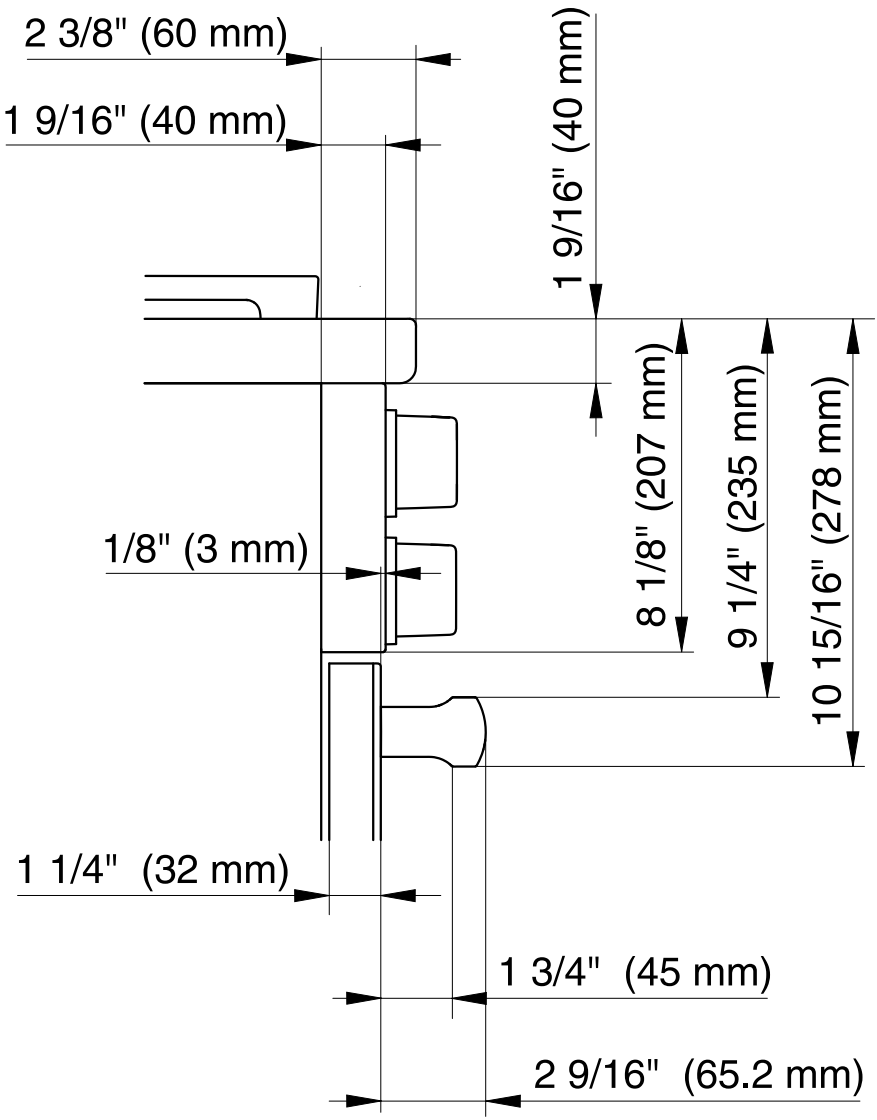

All Gas Range dimensions

Front side view of HR 1134

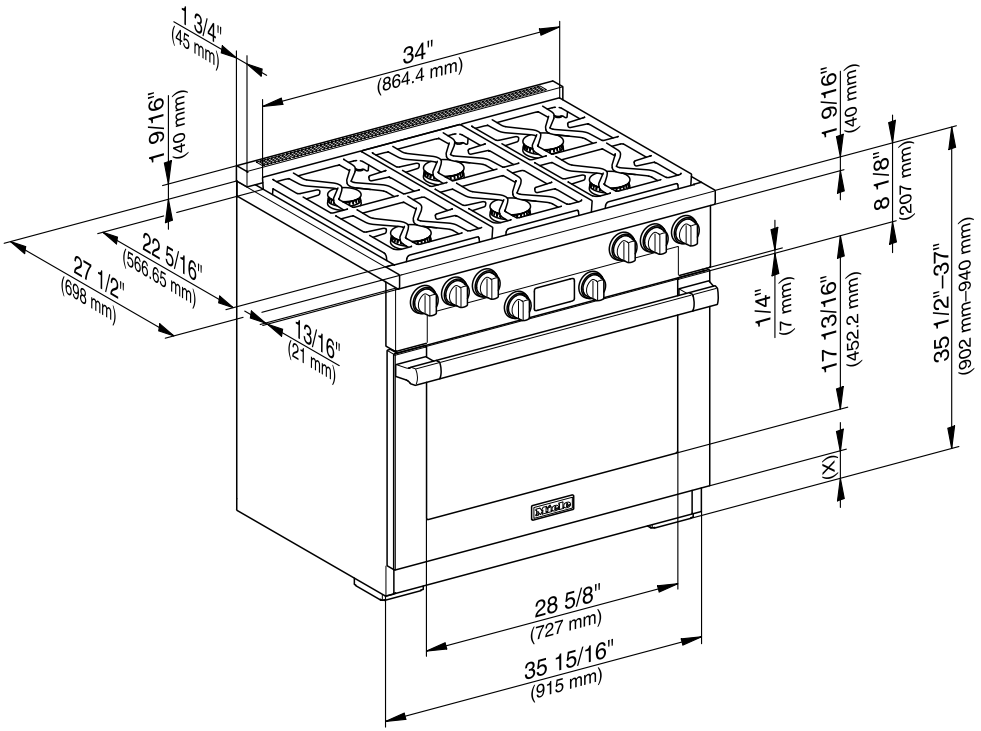

(x) = Depending on the appliance height adjustment: 5" - 6 1/2" (127 mm - 165.1 mm)

Rear view of HR 1134

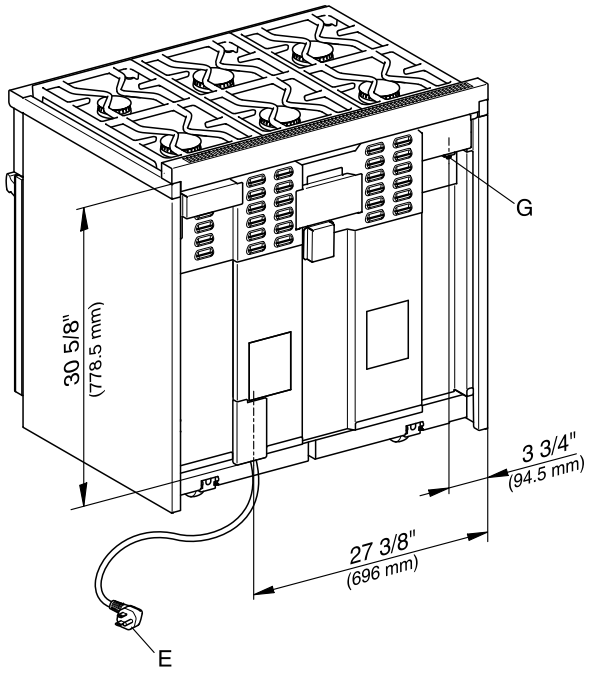

E = Electrical connection

G = Gas connection

All Gas Range dimensions

Detailed views of HR 1135

Side view of HR 1135

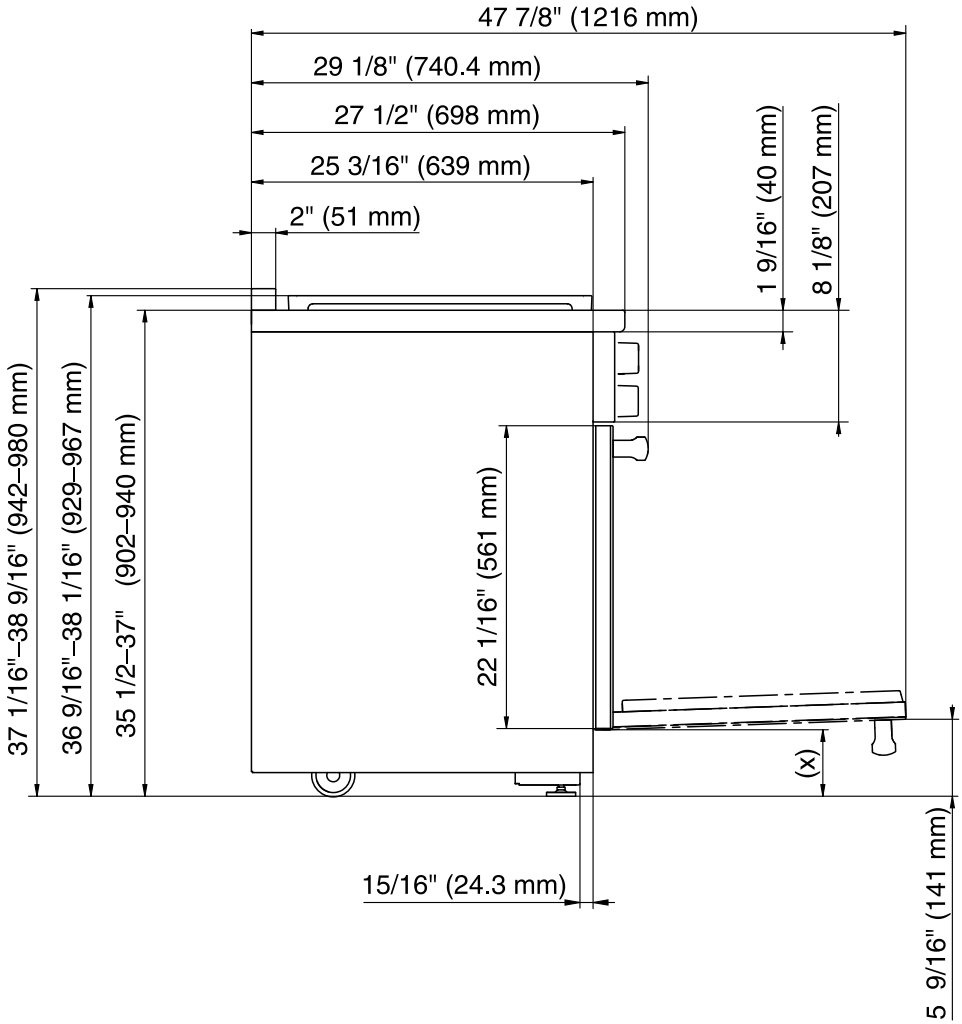

(x) = Depending on the appliance height adjustment: 5" - 6 1/2" (127 mm - 165.1 mm)

Detailed front side view of HR 1135

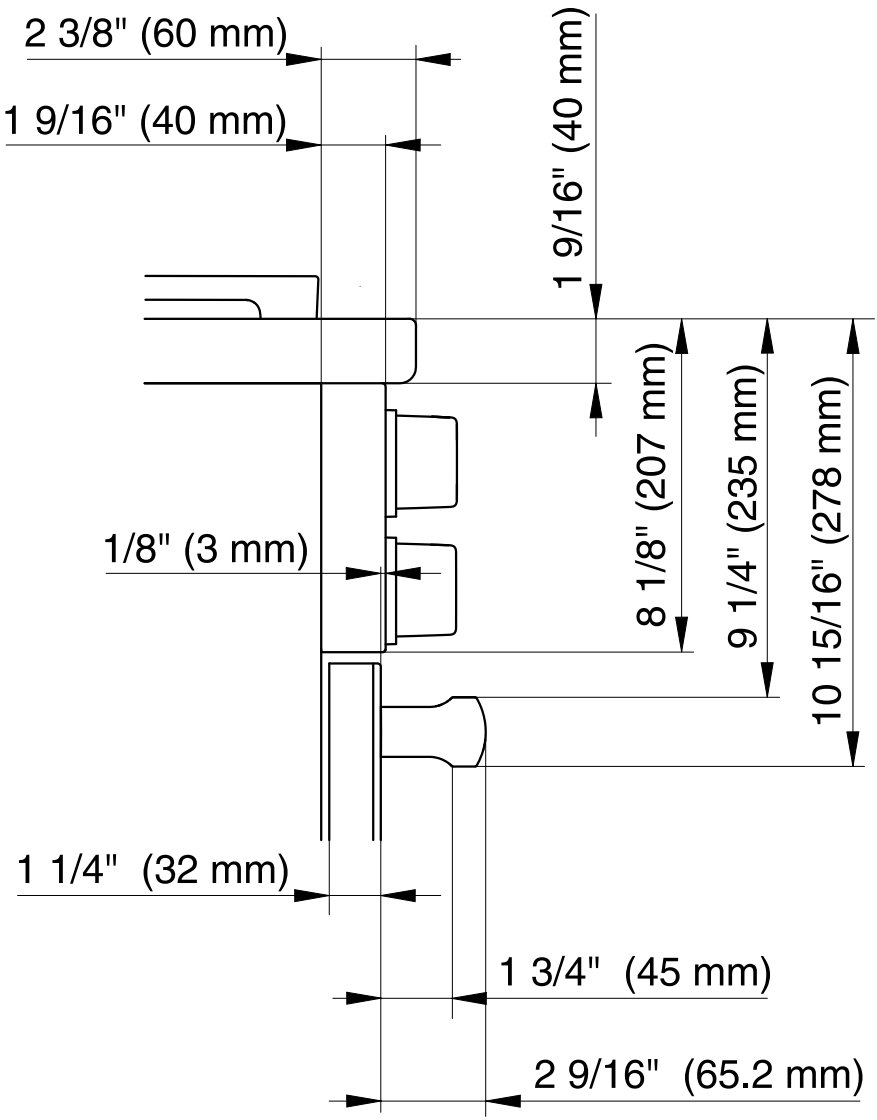

All Gas Range dimensions

Front side view of HR 1135

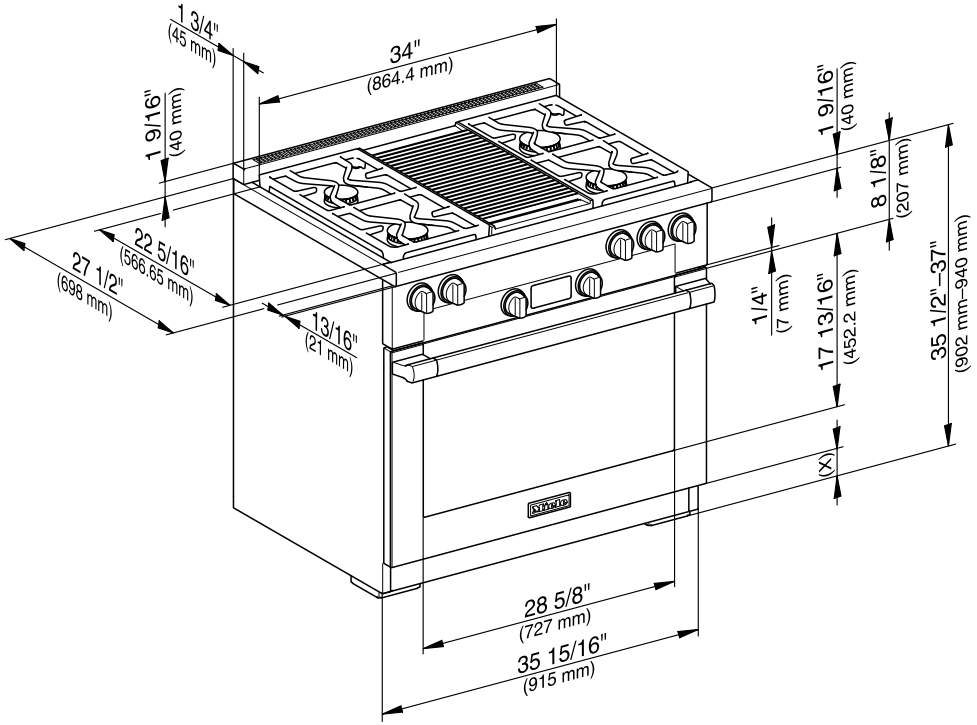

(x) = Depending on the appliance height adjustment: 5" - 6 1/2" (127 mm - 165.1 mm)

Rear view of HR 1135

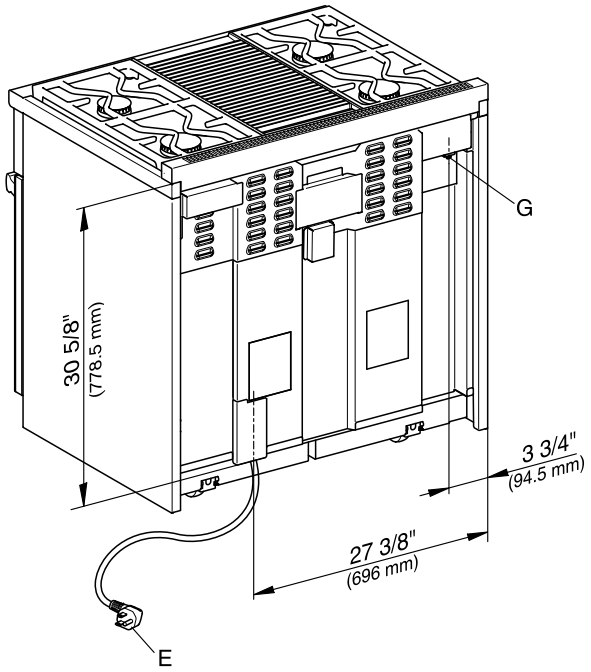

E = Electrical connection

G = Gas connection

All Gas Range dimensions

Detailed views of HR 1136

Side view of HR 1136

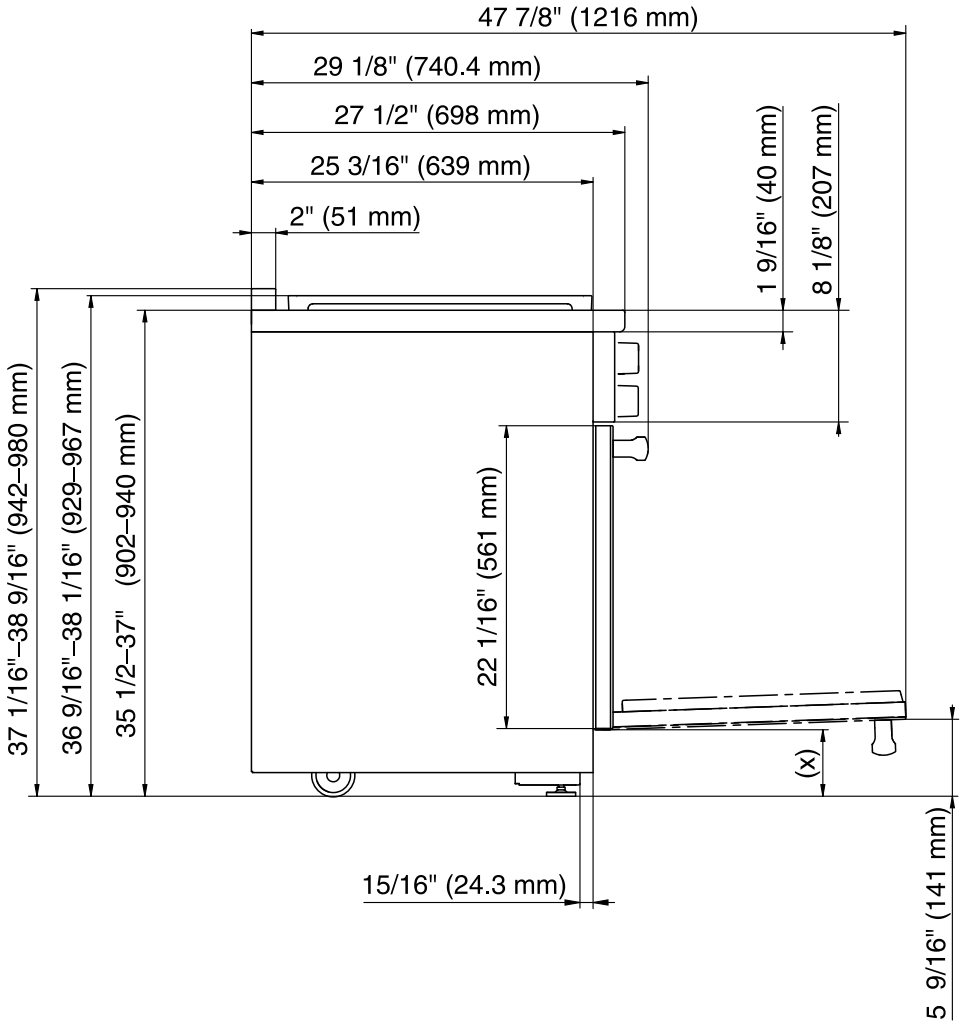

(x) = Depending on the appliance height adjustment: 5" - 6 1/2" (127 mm - 165.1 mm)

Detailed front side view of HR 1136

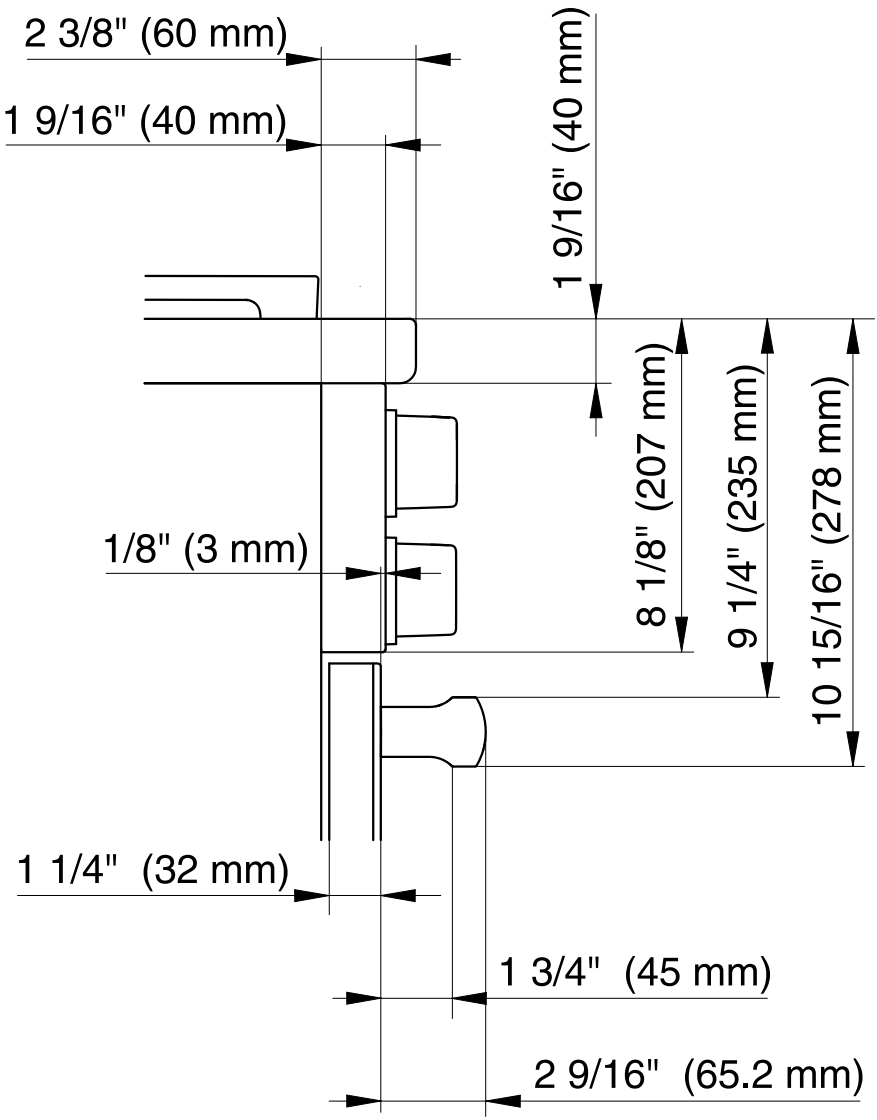

All Gas Range dimensions

Front side view of HR 1136

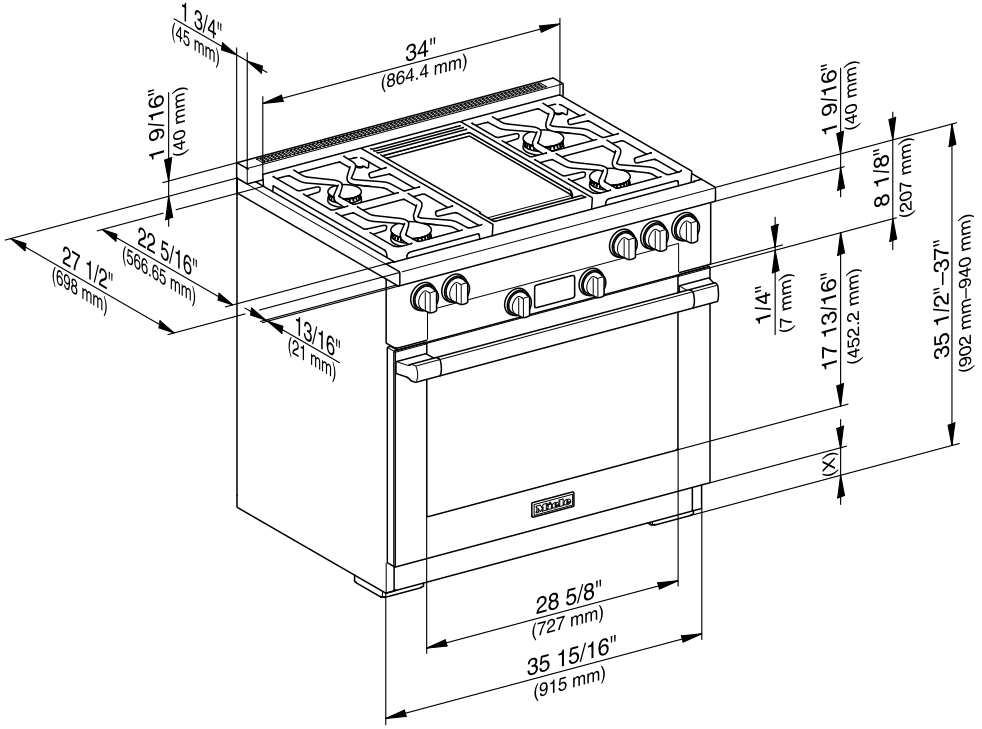

(x) = Depending on the appliance height adjustment: 5" - 6 1/2" (127 mm - 165.1 mm)

Rear view of HR 1136

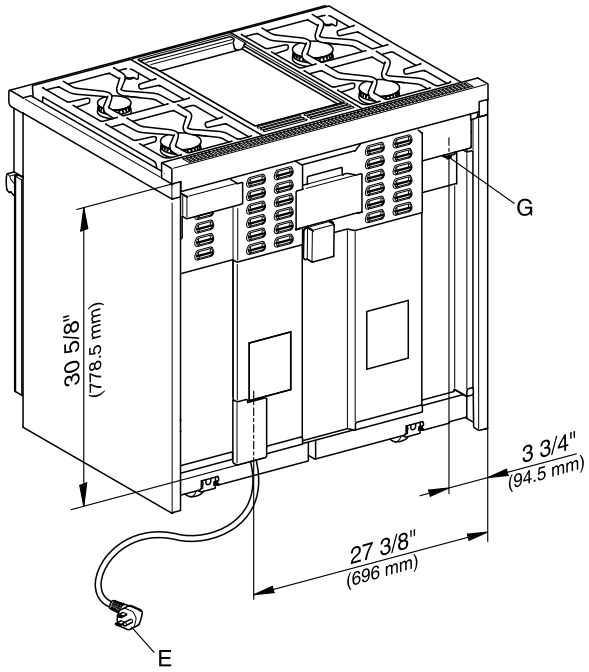

E = Electrical connection

G = Gas connection

Dual Fuel Range dimensions

Dual Fuel Range HR 1724 with Standard Burner Configuration M Pro Power Plus

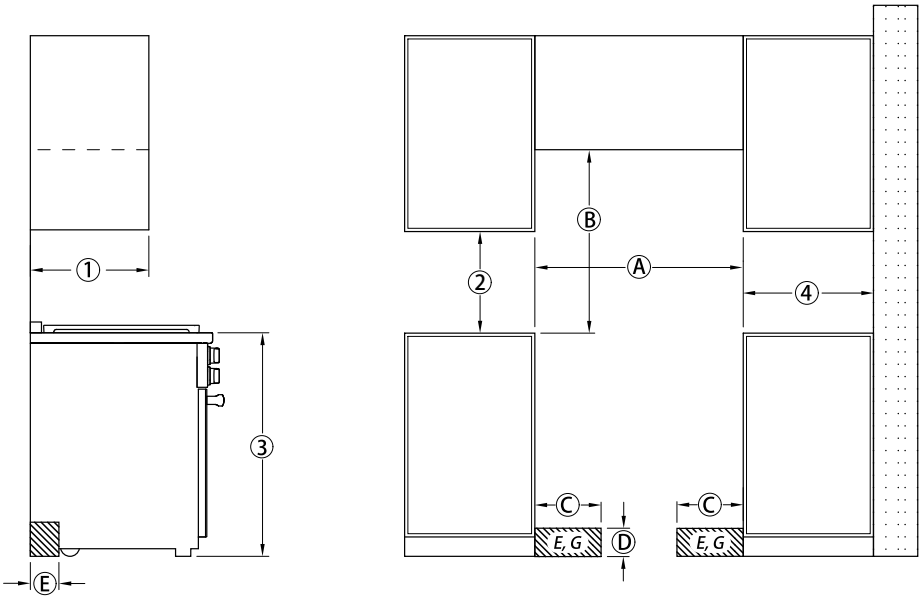

Ⓒ, Ⓓ, Ⓔ The shaded area represents the installation area for the connections:
E = Electrical connection, G = Gas connection

Position	Dimensions	Description
①	13" (330 mm)	Maximum depth of top cabinet
②	18" (457 mm)	Minimum distance to bottom edge of top cabinet
③	35 1/2"–37" (901–940 mm)	Distance from the floor to cooktop surface
④	10" (254 mm)	Minimum distance to combustible surfaces.

Position	Dimensions	Description	
Ⓐ	min. 30" (762 mm)	Niche width	
Ⓑ	37" (940 mm)	Minimum distance between the top of the cooking area and the bottom of an unprotected combustible surface.	
	30" (762 mm)	Minimum distance between the top of the cooking area and the bottom of the Miele Range Hood (DAR model with DRxB XL blower).	
	Refer to the Installation instructions for the Miele ventilation hood, Appliance dimensions (Distance between cooktop and ventilation hood (S)). For all other hoods please consult the manufacturer's specifications for required distances.		
Ⓒ	approx. 10 1/16" (256 mm)	Maximum connection width right and left	Position of the wall socket
Ⓓ	approx. 4 1/2" (115 mm)	Maximum connection height	
Ⓔ	approx. 2 13/16" (72 mm)	Maximum connection depth	

Please observe safe distances to rear combustible surfaces of 12" (305 mm) clearance. For zero clearance installation the Miele Backguards will satisfy the required distance to combustible surfaces. The Miele Backguard is available in 12" (305 mm) or 20" (508 mm) heights.

Dual Fuel Range dimensions

Dual Fuel Range HR 1924 with Standard Burner Configuration M Pro Power Plus

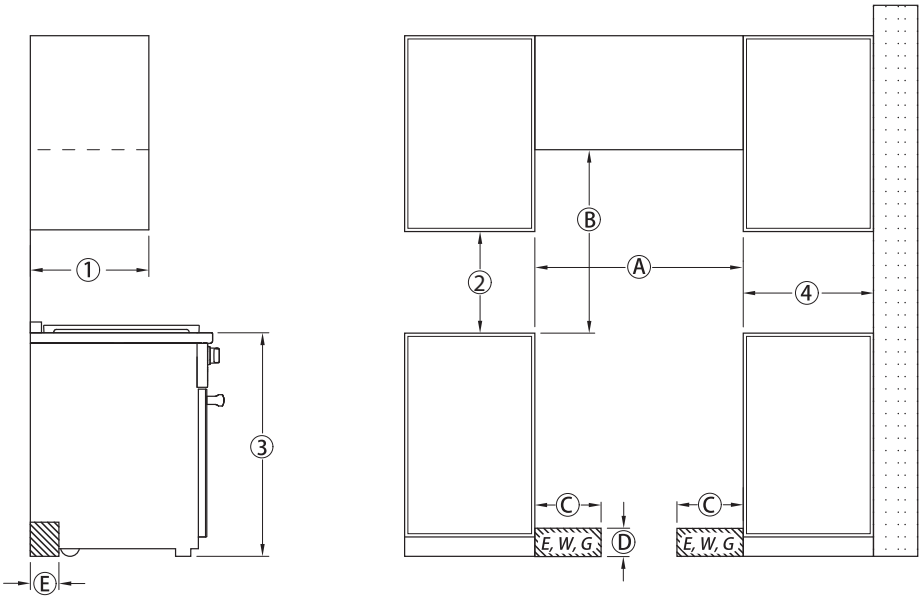

Ⓒ, Ⓓ, Ⓔ The shaded area represents the installation area for the connections:
E = Electrical connection, W = Water connection, G = Gas connection

Position	Dimensions	Description
①	13" (330 mm)	Maximum depth of top cabinet
②	18" (457 mm)	Minimum distance to bottom edge of top cabinet
③	35 1/2"–37" (901–940 mm)	Distance from the floor to cooktop surface
④	10" (254 mm)	Minimum distance to combustible surfaces.

Position	Dimensions	Description	
Ⓐ	min. 30" (762 mm)	Niche width	
Ⓑ	37" (940 mm)	Minimum distance between the top of the cooking area and the bottom of an unprotected combustible surface.	
	30" (762 mm)	Minimum distance between the top of the cooking area and the bottom of the Miele Range Hood (DAR model with DRxB XL blower).	
	Refer to the Installation instructions for the Miele ventilation hood, Appliance dimensions (Distance between cooktop and ventilation hood (S)). For all other hoods please consult the manufacturer's specifications for required distances.		
Ⓒ	approx. 10 1/16" (256 mm)	Maximum connection width right and left	Position of the wall socket
Ⓓ	approx. 4 1/2" (115 mm)	Maximum connection height	
Ⓔ	approx. 2 13/16" (72 mm)	Maximum connection depth	

Please observe safe distances to rear combustible surfaces of 12" (305 mm) clearance. For zero clearance installation the Miele Backguards will satisfy the required distance to combustible surfaces. The Miele Backguard is available in 12" (305 mm) or 20" (508 mm) heights.

Dual Fuel Range dimensions

Dual Fuel Range HR 193x/195x with Standard Burner Configuration M Pro Power Plus

HR 1934, HR 1935, HR 1936, HR 1954, HR 1955, HR 1956

If a BTU reducing jet kit is necessary an authorized installer is required to adapt the product in accordance with local codes and standards.

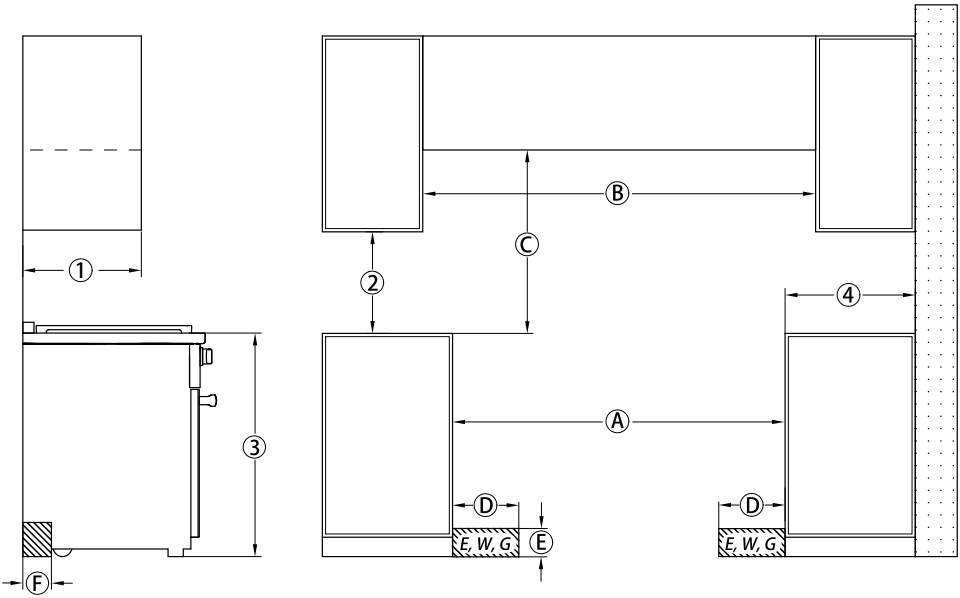

Ⓑ In case of combustible materials, a minimum distance of 6" must be observed on each side in addition to dimension Ⓐ.

Ⓓ, Ⓔ, Ⓕ The shaded area represents the installation area for the connections:
E = Electrical connection, W = Water connection, G = Gas connection

Position	Dimensions	Description
①	13" (330 mm)	Maximum depth of top cabinet
②	18" (457 mm)	Minimum distance to bottom edge of top cabinet
③	35 1/2"–37" (901–940 mm)	Distance from the floor to cooktop surface
④	10" (254 mm)	Minimum distance to combustible surfaces.

HR 1934

Position	Dimensions	Description	
Ⓐ	min. 36" (915 mm)	Niche width	
Ⓑ	6" + Ⓐ + 6" (150 mm + Ⓐ + 150 mm)	If combustible materials are present, an additional minimum distance of 6" (150 mm) (each side) is required. Ensure that the local regulations are observed.	
Ⓒ	37" (940 mm)	Minimum distance between the top of the cooking area and the bottom of an unprotected combustible surface.	
	36" (915 mm)	Minimum distance between the top of the cooking area and the bottom of the Miele Range Hood (DAR model with DRxB XL blower).	
	30" (762 mm)	Minimum distance between the top of the cooking area and the bottom of the Miele Range Hood (DAR model with DRxB XXL blower).	
	For all other hoods please consult the manufacturer's specifications for required distances.		
Ⓓ	approx. 13 1/16" (332.5 mm)	Maximum connection width right and left	Position of the wall socket
Ⓔ	approx. 4 1/2" (115 mm)	Maximum connection height	
Ⓕ	approx. 2 13/16" (72 mm)	Maximum connection depth	

Please observe safe distances to rear combustible surfaces of 12" (305 mm) clearance. For zero clearance installation the Miele Backguards will satisfy the required distance to combustible surfaces. The Miele Backguard is available in 12" (305 mm) or 20" (508 mm) heights.

Dual Fuel Range dimensions

HR 1935, HR 1936

Position	Dimensions	Description	
Ⓐ	min. 36" (915 mm)	Niche width	
Ⓑ	6" + Ⓐ + 6" (150 mm + Ⓐ + 150 mm)	If combustible materials are present, an additional minimum distance of 6" (150 mm) (each side) is required. Ensure that the local regulations are observed.	
Ⓒ	37" (940 mm)	Minimum distance between the top of the cooking area and the bottom of an unprotected combustible surface.	
	30" (762 mm)	Minimum distance between the top of the cooking area and the bottom of the Miele Range Hood (DAR model with DRxB XL or DRxB XXL blower).	
	For all other hoods please consult the manufacturer's specifications for required distances.		
Ⓓ	approx. 13 1/16" (332.5 mm)	Maximum connection width right and left	Position of the wall socket
Ⓔ	approx. 4 1/2" (115 mm)	Maximum connection height	
Ⓕ	approx. 2 13/16" (72 mm)	Maximum connection depth	

Please observe safe distances to rear combustible surfaces of 12" (305 mm) clearance. For zero clearance installation the Miele Backguards will satisfy the required distance to combustible surfaces. The Miele Backguard is available in 12" (305 mm) or 20" (508 mm) heights.

HR 1954, HR 1955, HR 1956

Position	Dimensions	Description	
Ⓐ	min. 48" (1220 mm)	Niche width	
Ⓑ	6" + Ⓐ + 6" (150 mm + Ⓐ + 150 mm)	If combustible materials are present, an additional minimum distance of 6" (150 mm) (each side) is required. Ensure that the local regulations are observed.	
Ⓒ	37" (940 mm)	Minimum distance between the top of the cooking area and the bottom of an unprotected combustible surface.	
	36" (915 mm)	Minimum distance between the top of the cooking area and the bottom of the Miele Range Hood (DAR model with DRxB XXL blower).	
	For all other hoods please consult the manufacturer's specifications for required distances.		
Ⓓ	approx. 19 1/8" (485 mm)	Maximum connection width right and left	Position of the wall socket
Ⓔ	approx. 3 1/2" (90 mm)	Maximum connection height	
Ⓕ	approx. 2 13/16" (72 mm)	Maximum connection depth	

Please observe safe distances to rear combustible surfaces of 12" (305 mm) clearance. For zero clearance installation the Miele Backguards will satisfy the required distance to combustible surfaces. The Miele Backguard is available in 12" (305 mm) or 20" (508 mm) heights.

Dual Fuel Range dimensions

Dual Fuel Range HR 193x with BTU reducing nozzle configuration (M Pro Power Zero Gap Kit, M Pro - Décor Hood)

HR 1934, HR 1935, HR 1936

For Miele Range Hoods and Miele Range-Décor Hoods:

If a BTU reducing jet kit is necessary an authorized installer is required to adapt the product in accordance with local codes and standards. The nozzles are a standard accessory and are changed during installation, see also "Possible combinations - Range with BTU reducing jet kit".

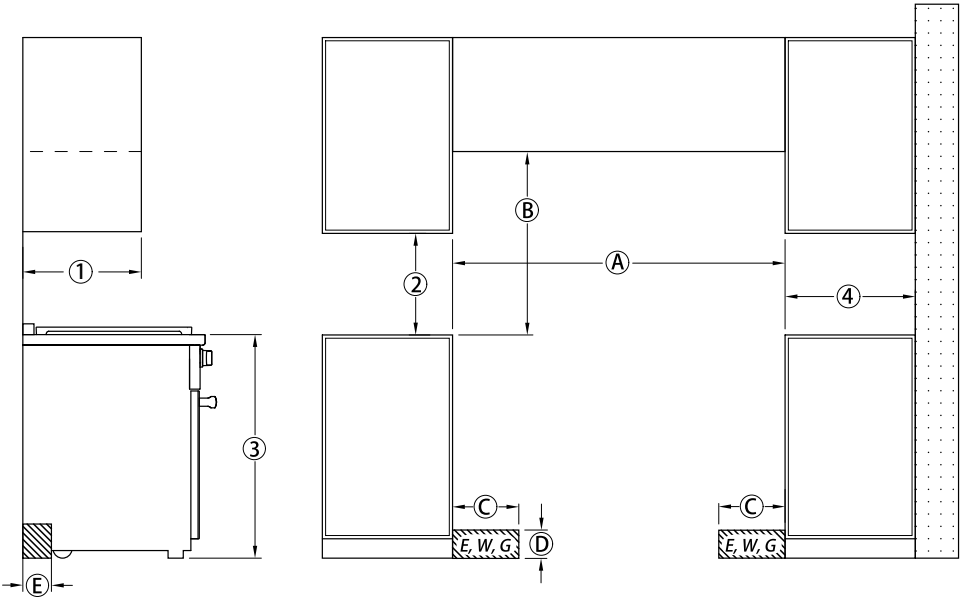

Ⓒ, Ⓓ, Ⓔ The shaded area represents the installation area for the connections:
E = Electrical connection, W = Water connection, G = Gas connection

Position	Dimensions	Description
①	13" (330 mm)	Maximum depth of top cabinet
②	18" (457 mm)	Minimum distance to bottom edge of top cabinet
③	35 1/2"–37" (901–940 mm)	Distance from the floor to cooktop surface
④	10" (254 mm)	Minimum distance to combustible surfaces.

HR 1934

Position	Dimensions	Description	
Ⓐ	min. 36" (915 mm)	Niche width Please contact Miele Service for more information.	
Ⓑ	37" (940 mm)	Minimum distance between the top of the cooking area and the bottom of an unprotected combustible surface.	
	36" (915 mm)	Minimum distance between the top of the cooking area and the bottom of the Miele Range Hood (DAR model with DRxB XL blower).	
	30" (762 mm)	Minimum distance between the top of the cooking area and the bottom of the Miele Range Hood (DAR model with DRxB XXL blower).	
	Refer to the Installation instructions for the Miele ventilation hood, Appliance dimensions (Distance between cooktop and ventilation hood (S)). For all other hoods please consult the manufacturer's specifications for required distances.		
Ⓒ	approx. 13 1/16" (332.5 mm)	Maximum connection width right and left	Position of the wall socket
Ⓓ	approx. 4 1/2" (115 mm)	Maximum connection height	
Ⓔ	approx. 2 13/16" (72 mm)	Maximum connection depth	

Please observe safe distances to rear combustible surfaces of 12" (305 mm) clearance. For zero clearance installation the Miele Backguards will satisfy the required distance to combustible surfaces. The Miele Backguard is available in 12" (305 mm) or 20" (508 mm) heights.

Dual Fuel Range dimensions

HR 1935, HR 1936

Position	Dimensions	Description	
Ⓐ	min. 36" (915 mm)	Niche width Please contact Miele Service for more information.	
Ⓑ	37" (940 mm)	Minimum distance between the top of the cooking area and the bottom of an unprotected combustible surface.	
	30" (762 mm)	Minimum distance between the top of the cooking area and the bottom of the Miele Range Hood (DAR model with DRxB XL or DRxB XXL blower).	
	Refer to the Installation instructions for the Miele ventilation hood, Appliance dimensions (Distance between cooktop and ventilation hood (S)). For all other hoods please consult the manufacturer's specifications for required distances.		
Ⓒ	approx. 13 1/16" (332.5 mm)	Maximum connection width right and left	Position of the wall socket
Ⓓ	approx. 4 1/2" (115 mm)	Maximum connection height	
Ⓔ	approx. 2 13/16" (72 mm)	Maximum connection depth	

Please observe safe distances to rear combustible surfaces of 12" (305 mm) clearance. For zero clearance installation the Miele Backguards will satisfy the required distance to combustible surfaces. The Miele Backguard is available in 12" (305 mm) or 20" (508 mm) heights.

Dual Fuel Range HR 195x with BTU reducing nozzle configuration M Pro Power Zero Gap Kit

HR 1954, HR 1955, HR 1956

For Miele Range Hoods:

If a BTU reducing jet kit is necessary an authorized installer is required to adapt the product in accordance with local codes and standards. The nozzles are a standard accessory and are changed during installation, see also "Possible combinations - Range with BTU reducing jet kit".

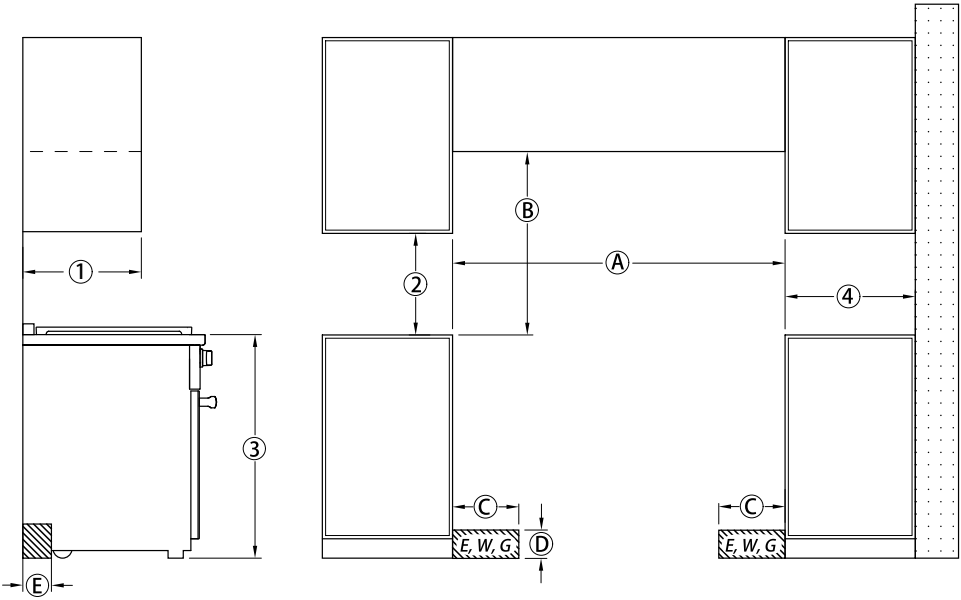

Ⓒ, Ⓓ, Ⓔ The shaded area represents the installation area for the connections:
E = Electrical connection, W = Water connection, G = Gas connection

Position	Dimensions	Description
①	13" (330 mm)	Maximum depth of top cabinet
②	18" (457 mm)	Minimum distance to bottom edge of top cabinet
③	35 1/2"–37" (901–940 mm)	Distance from the floor to cooktop surface
④	10" (254 mm)	Minimum distance to combustible surfaces.

Dual Fuel Range dimensions

HR 1954, HR 1955, HR 1956

Position	Dimensions	Description	
Ⓐ	min. 48" (1220 mm)	Niche width Please contact Miele Service for more information.	
Ⓑ	37" (940 mm)	Minimum distance between the top of the cooking area and the bottom of an unprotected combustible surface.	
	30" (762 mm)	Minimum distance between the top of the cooking area and the bottom of the Miele Range Hood (DAR model with DRxB XXL blower).	
	Refer to the Installation instructions for the Miele ventilation hood, Appliance dimensions (Distance between cooktop and ventilation hood (S)). For all other hoods please consult the manufacturer's specifications for required distances.		
Ⓒ	approx. 19 1/8" (485 mm)	Maximum connection width right and left	Position of the wall socket
Ⓓ	approx. 3 1/2" (90 mm)	Maximum connection height	
Ⓔ	approx. 2 13/16" (72 mm)	Maximum connection depth	

Please observe safe distances to rear combustible surfaces of 12" (305 mm) clearance. For zero clearance installation the Miele Backguards will satisfy the required distance to combustible surfaces. The Miele Backguard is available in 12" (305 mm) or 20" (508 mm) heights.

Detailed views of HR 1724

Side view of HR 1724

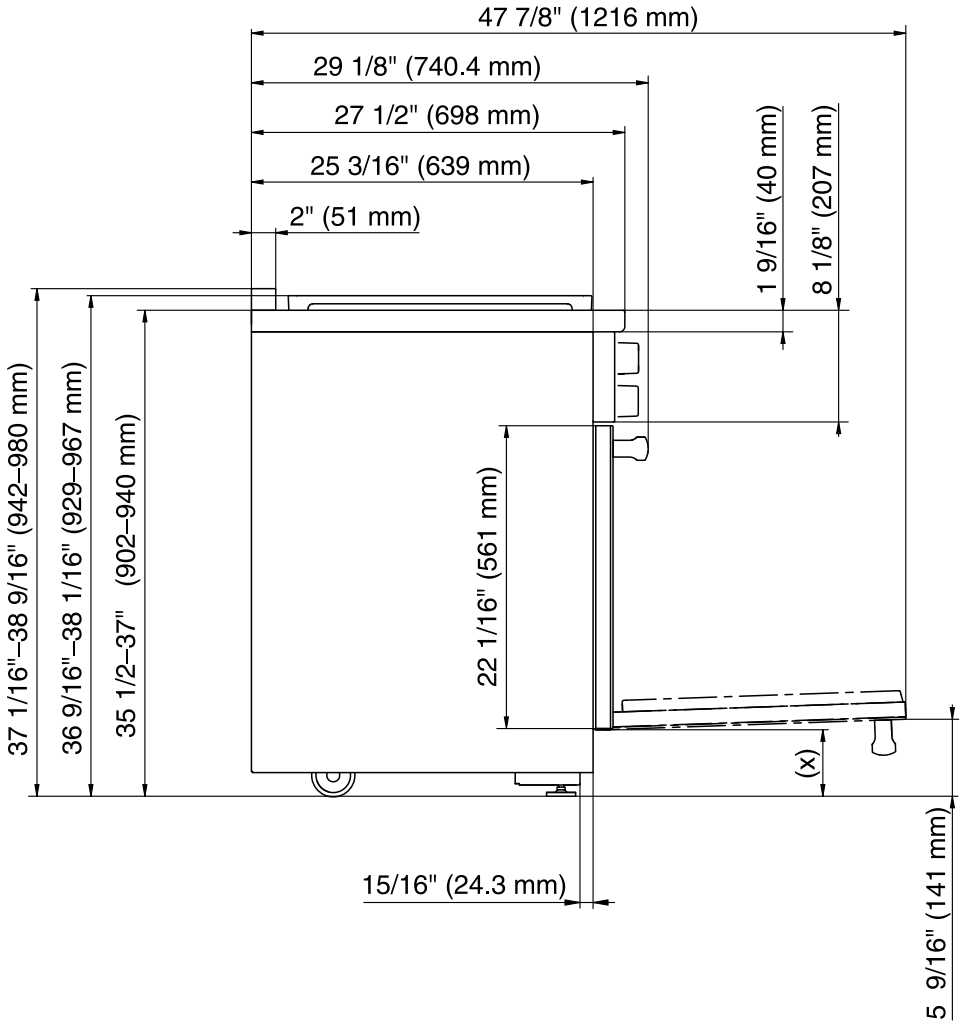

(x) = Depending on the appliance height adjustment: 5" - 6 1/2" (127 mm - 165.1 mm)

Dual Fuel Range dimensions

Detailed front side view of HR 1724

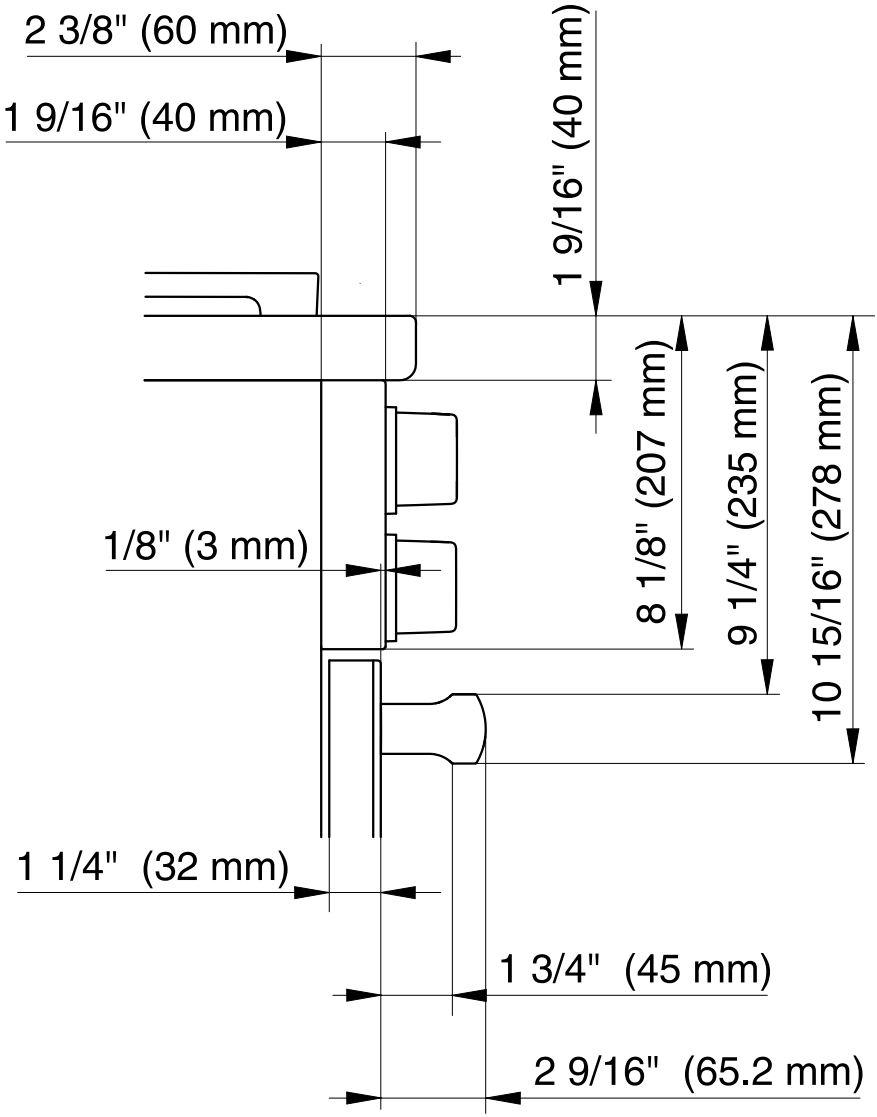

Front side view of HR 1724

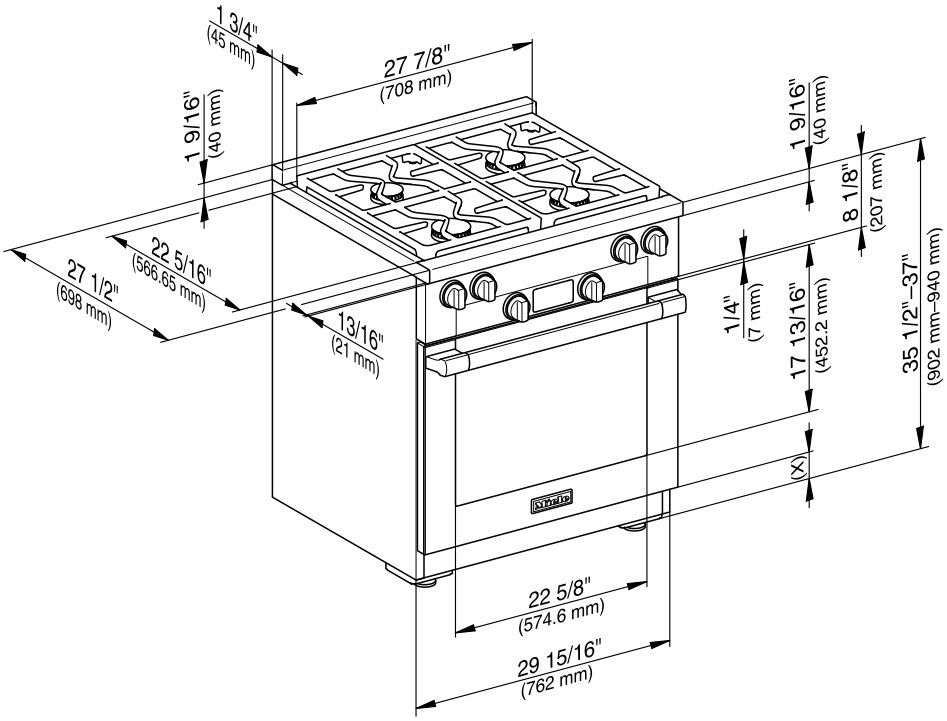

(x) = Depending on the appliance height adjustment: 5" - 6 1/2" (127 mm - 165.1 mm)

Dual Fuel Range dimensions

Rear view of HR 1724

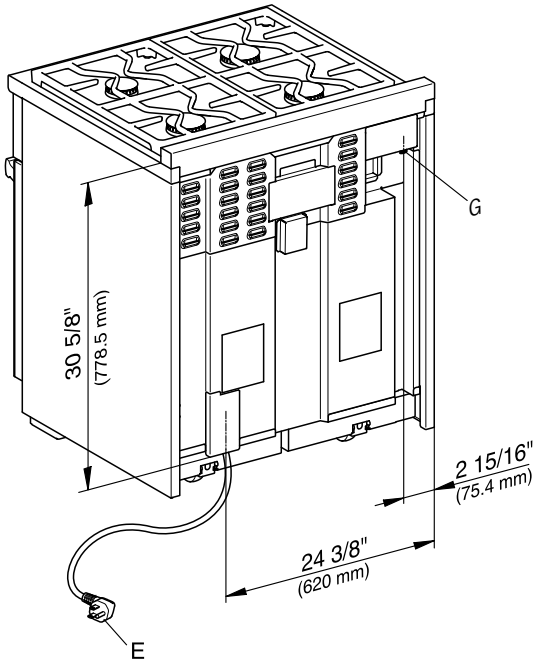

E = Electrical connection

G = Gas connection

Detailed views of HR 1924

Side view of HR 1924

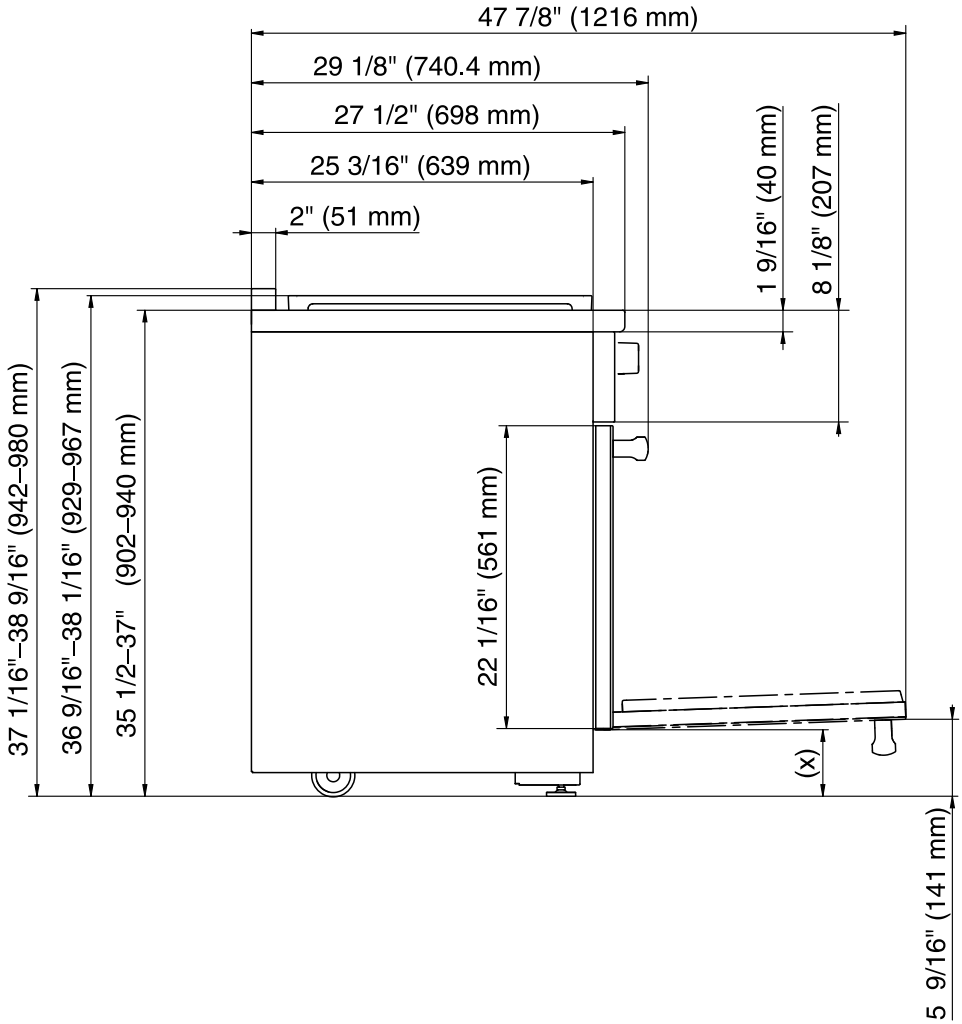

(x) = Depending on the appliance height adjustment: 5" - 6 1/2" (127 mm - 165.1 mm)

Dual Fuel Range dimensions

Detailed front side view of HR 1924

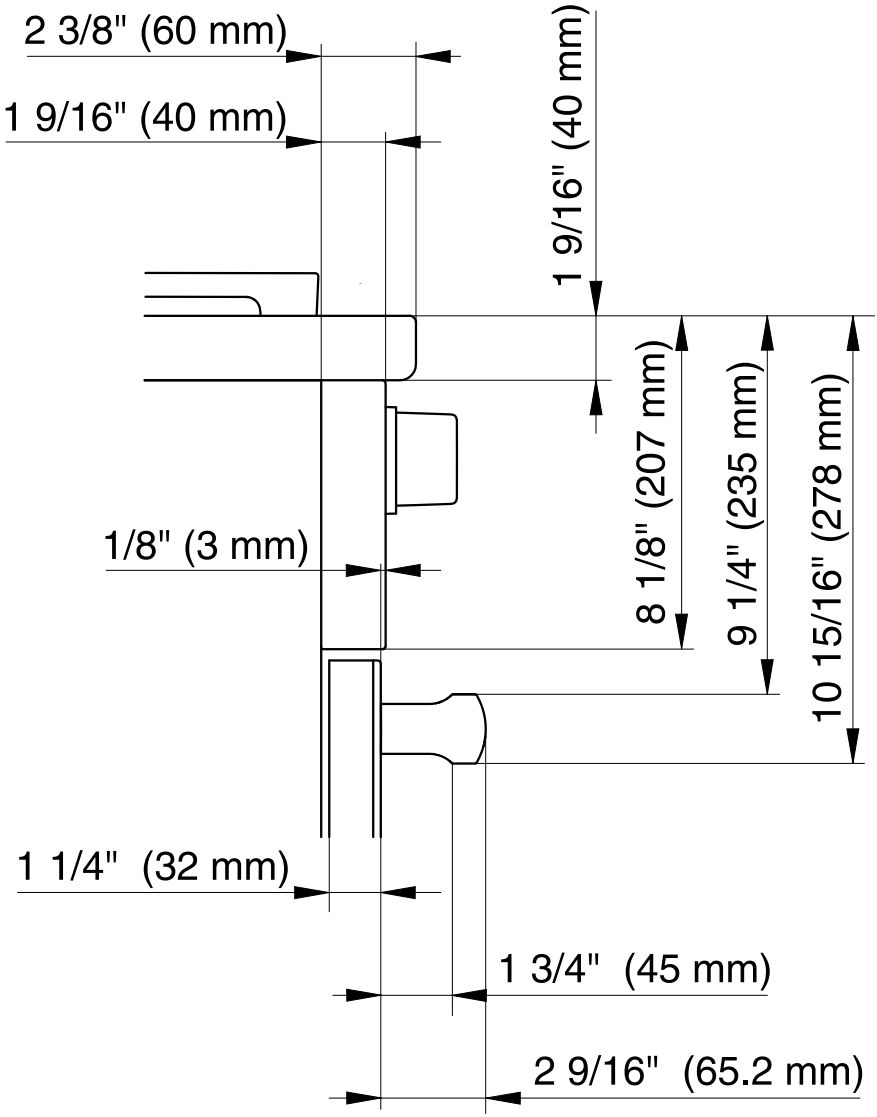

Front side view of HR 1924

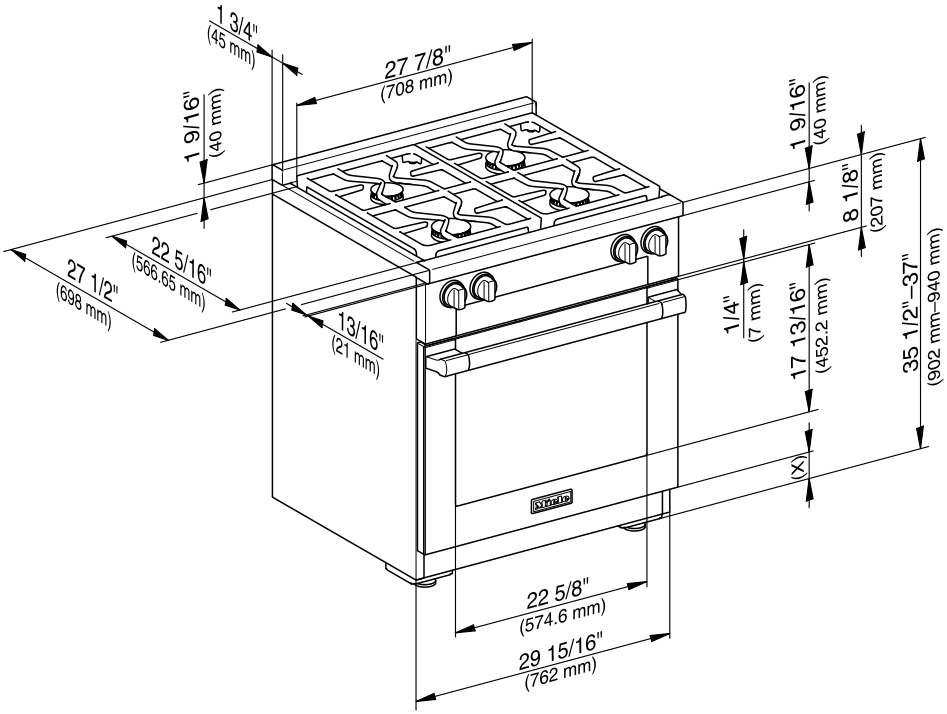

(x) = Depending on the appliance height adjustment: 5" - 6 1/2" (127 mm - 165.1 mm)

Dual Fuel Range dimensions

Rear view of HR 1924

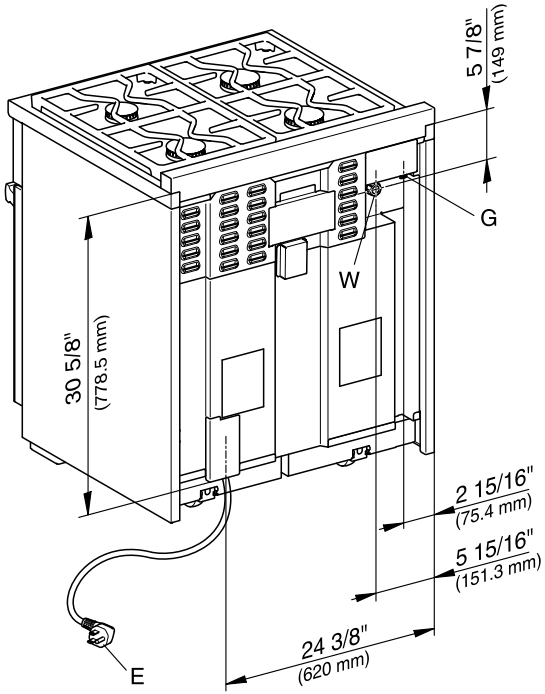

E = Electrical connection

W = Water connection

G = Gas connection

Detailed views of HR 1934

Side view of HR 1934

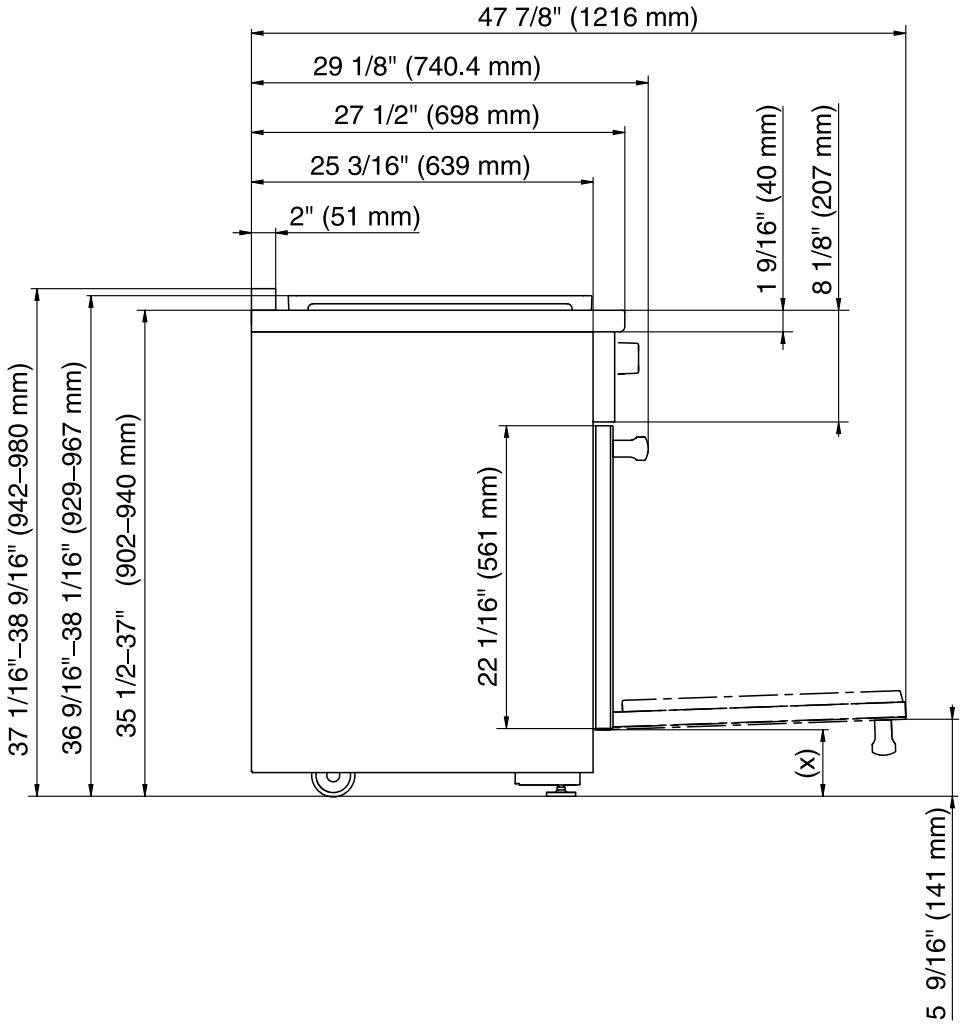

(x) = Depending on the appliance height adjustment: 5" - 6 1/2" (127 mm - 165.1 mm)

Dual Fuel Range dimensions

Detailed front side view of HR 1934

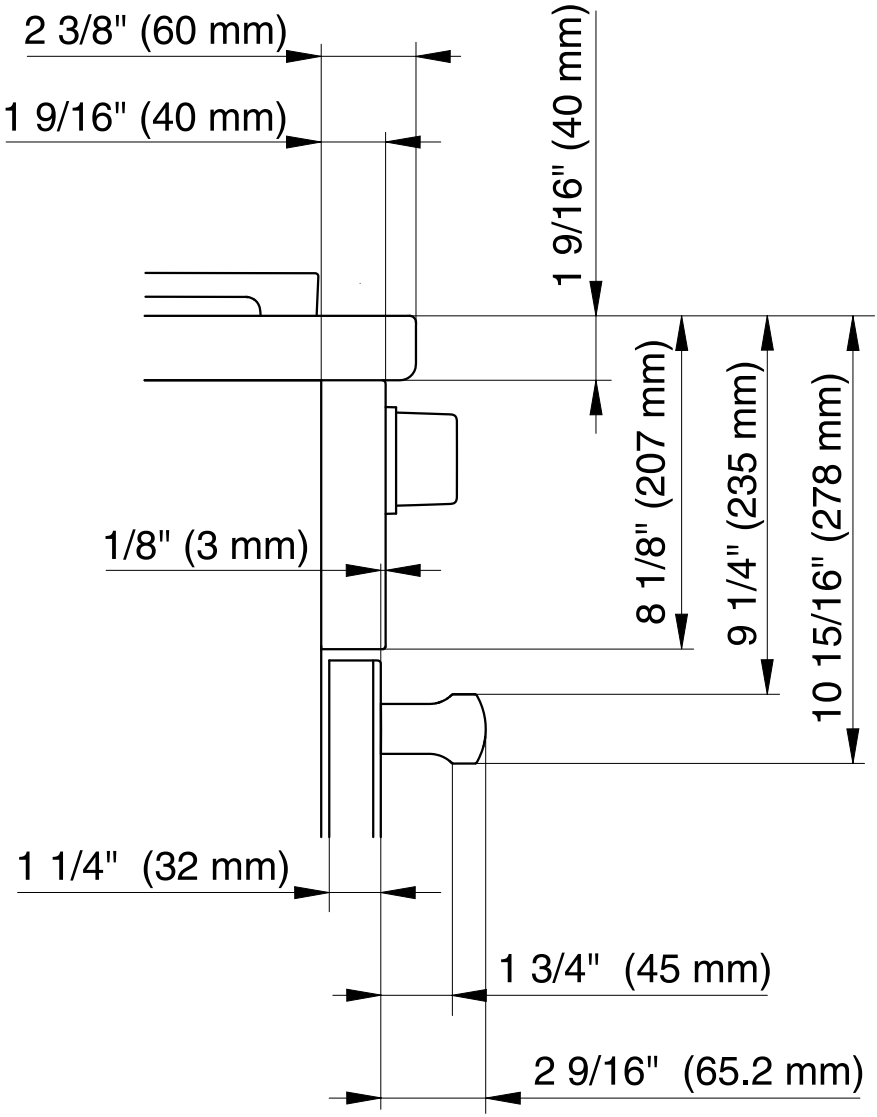

Front side view of HR 1934

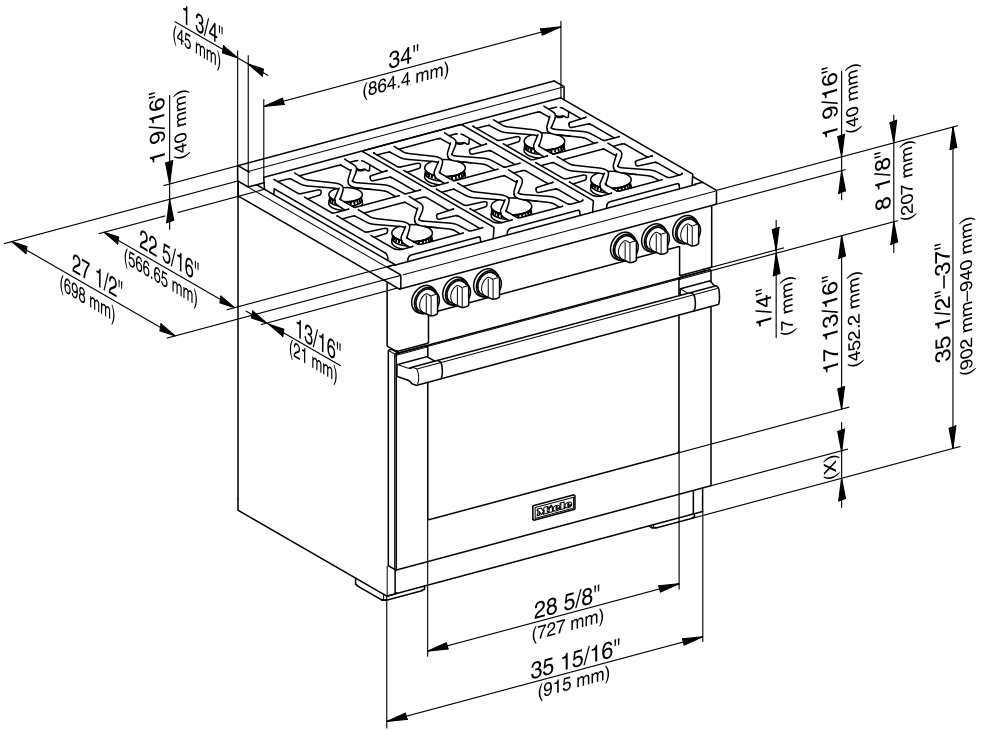

(x) = Depending on the appliance height adjustment: 5" - 6 1/2" (127 mm - 165.1 mm)

Dual Fuel Range dimensions

Rear view of HR 1934

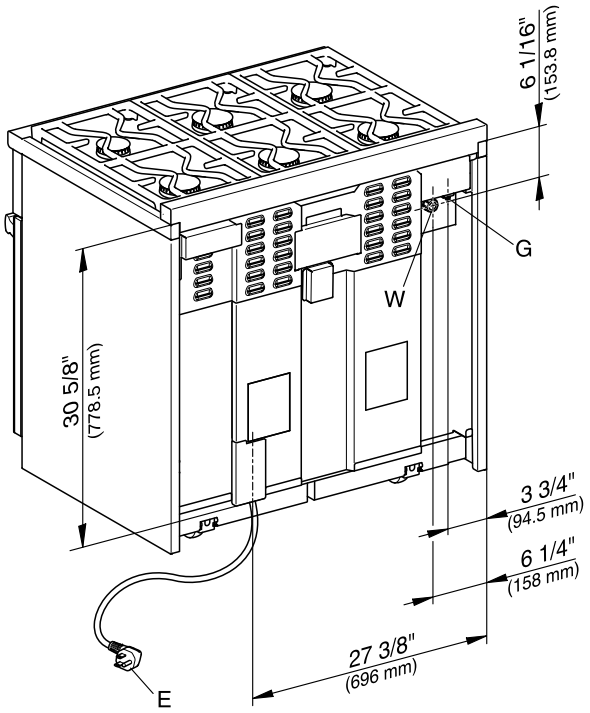

E = Electrical connection

W = Water connection

G = Gas connection

Detailed views of HR 1935

Side view of HR 1935

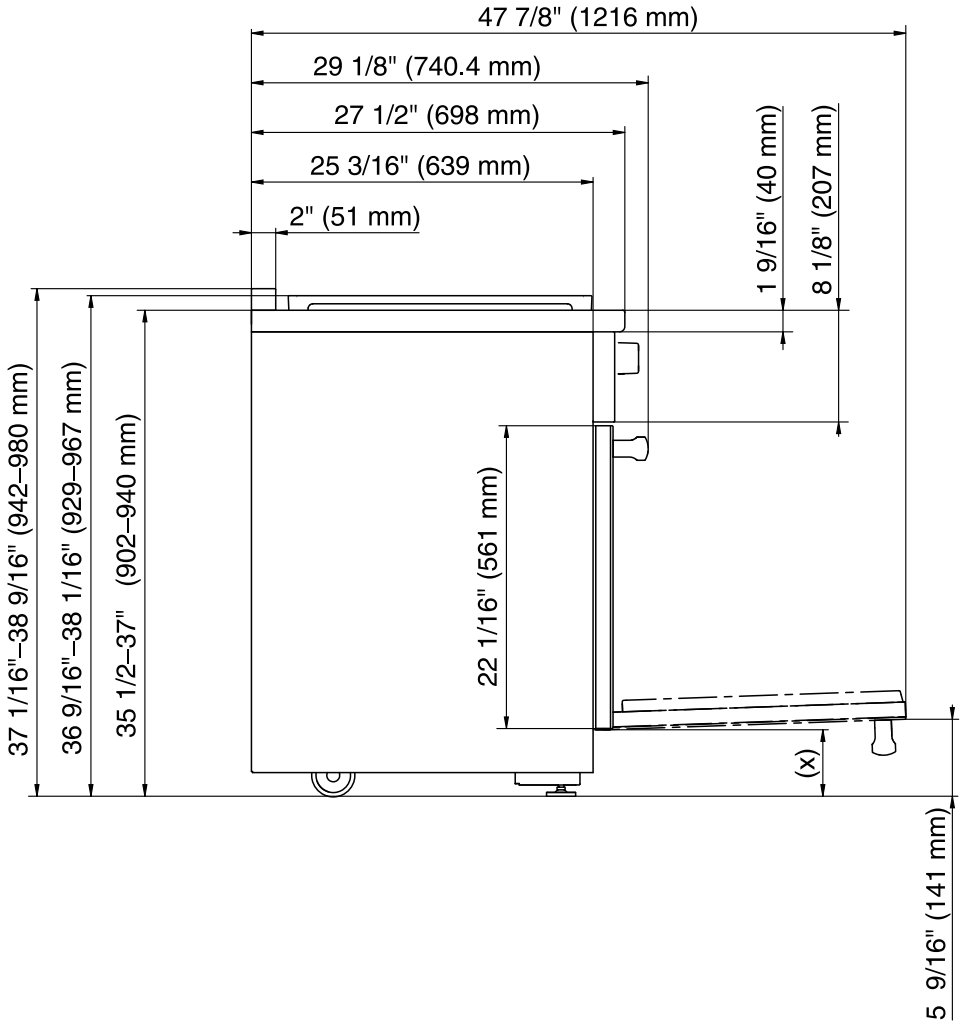

(x) = Depending on the appliance height adjustment: 5" - 6 1/2" (127 mm - 165.1 mm)

Dual Fuel Range dimensions

Detailed front side view of HR 1935

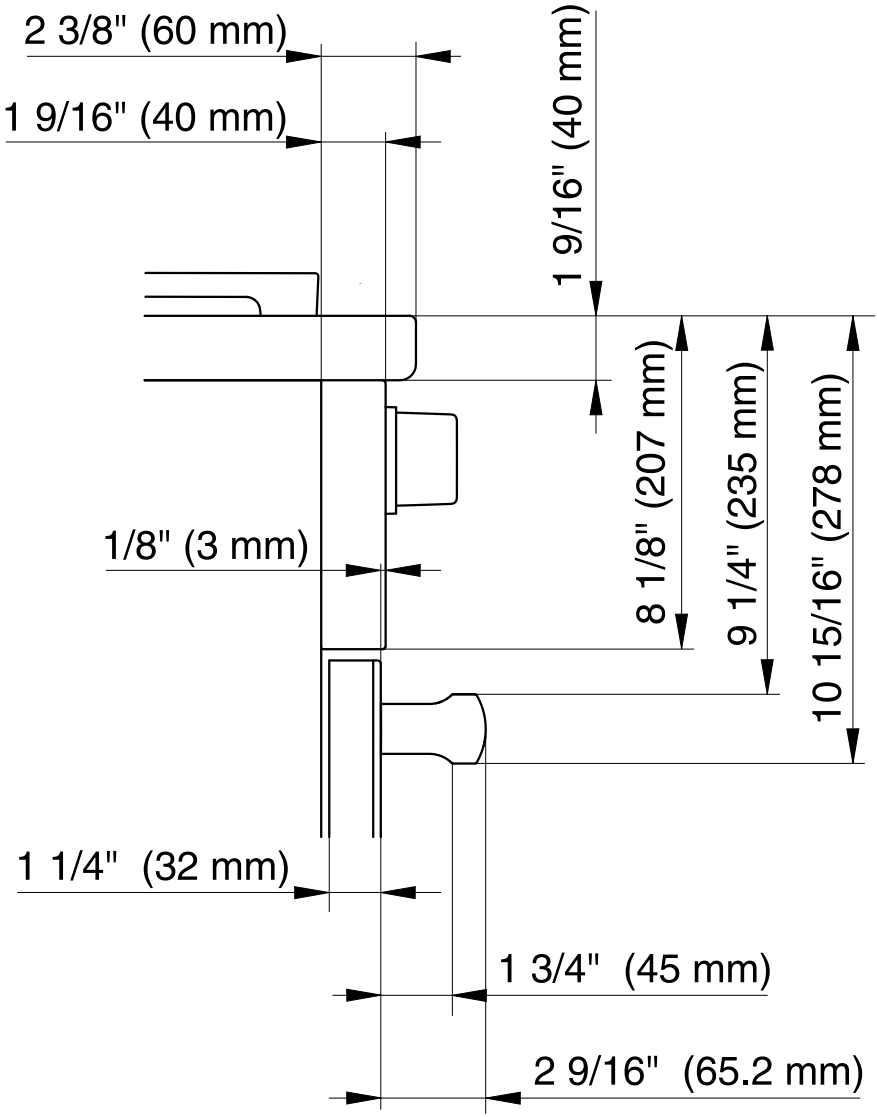

Front side view of HR 1935

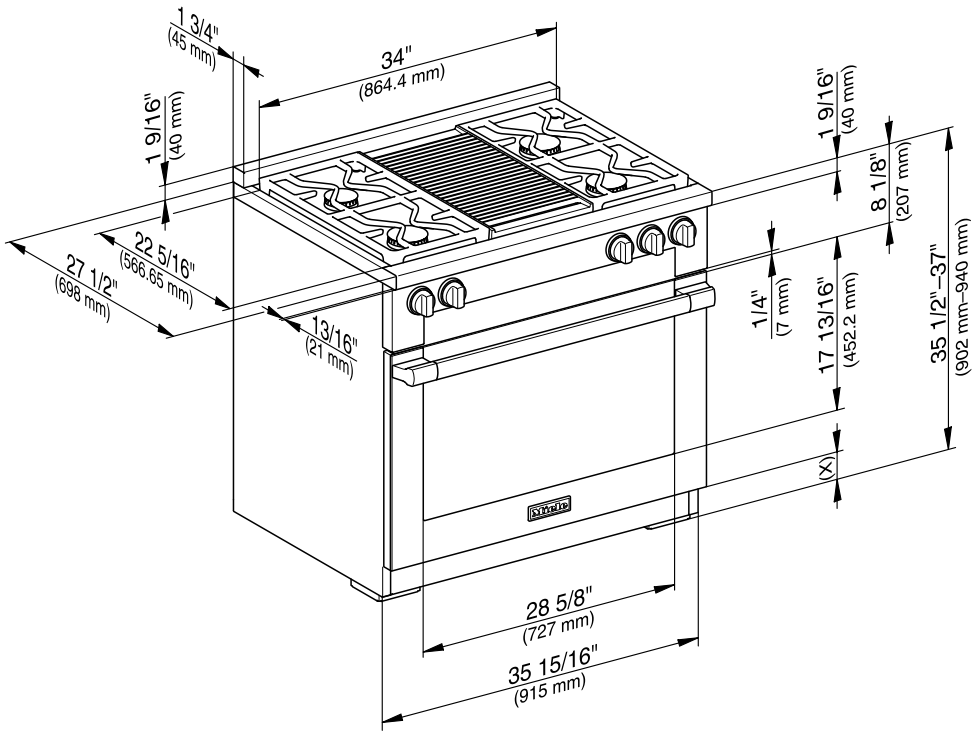

(x) = Depending on the appliance height adjustment: 5" - 6 1/2" (127 mm - 165.1 mm)

Dual Fuel Range dimensions

Rear view of HR 1935

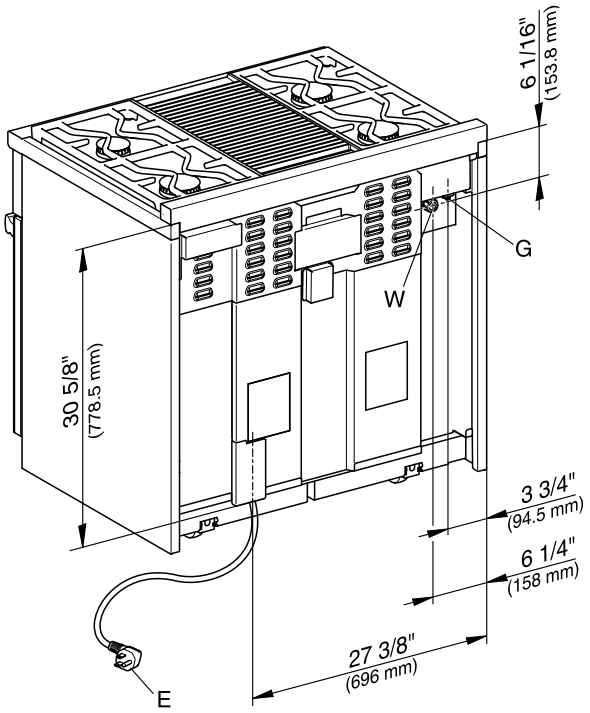

E = Electrical connection

W = Water connection

G = Gas connection

Detailed views of HR 1936

Side view of HR 1936

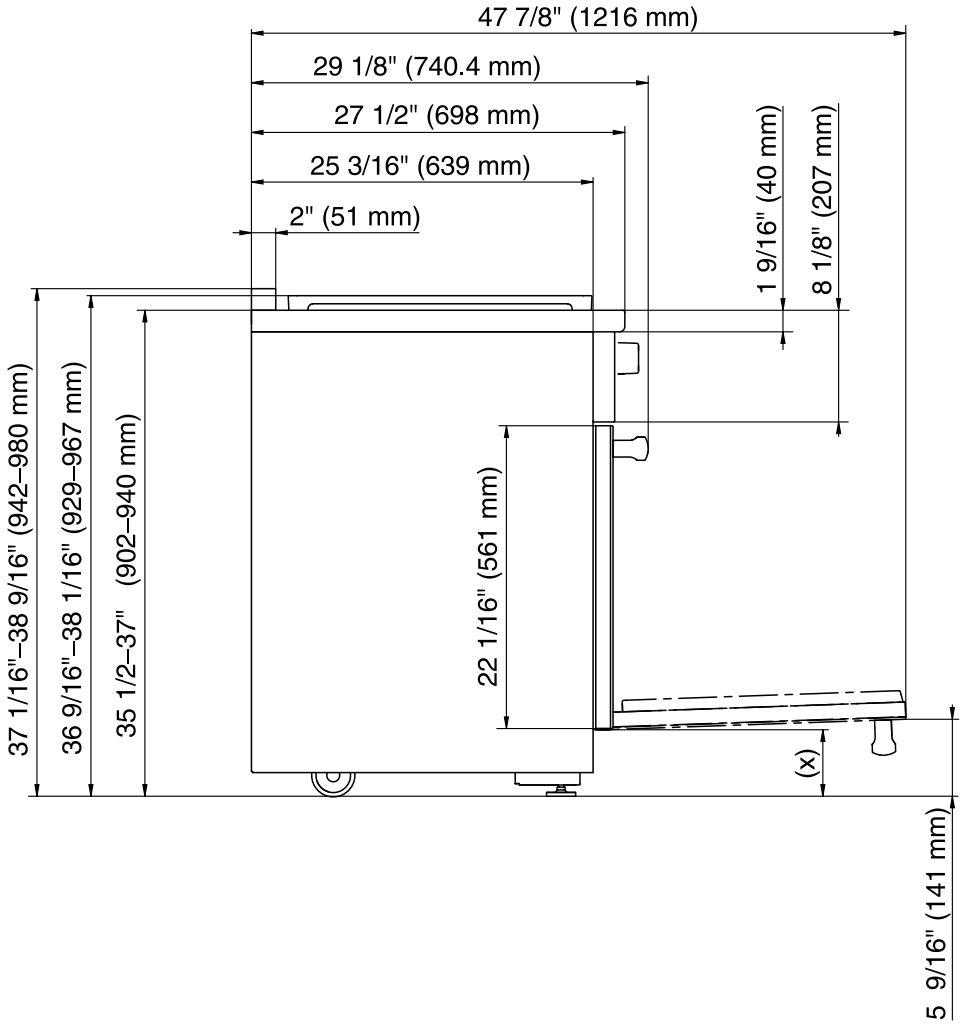

(x) = Depending on the appliance height adjustment: 5" - 6 1/2" (127 mm - 165.1 mm)

Dual Fuel Range dimensions

Detailed front side view of HR 1936

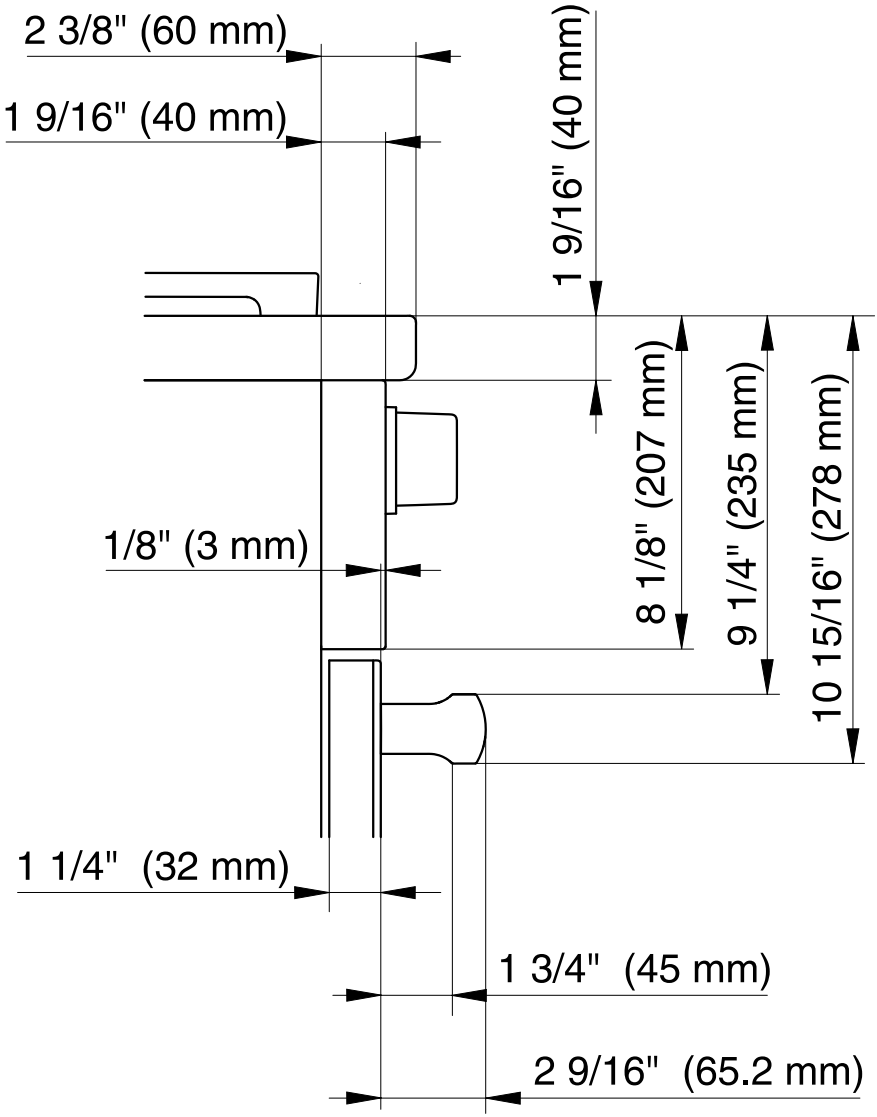

Front side view of HR 1936

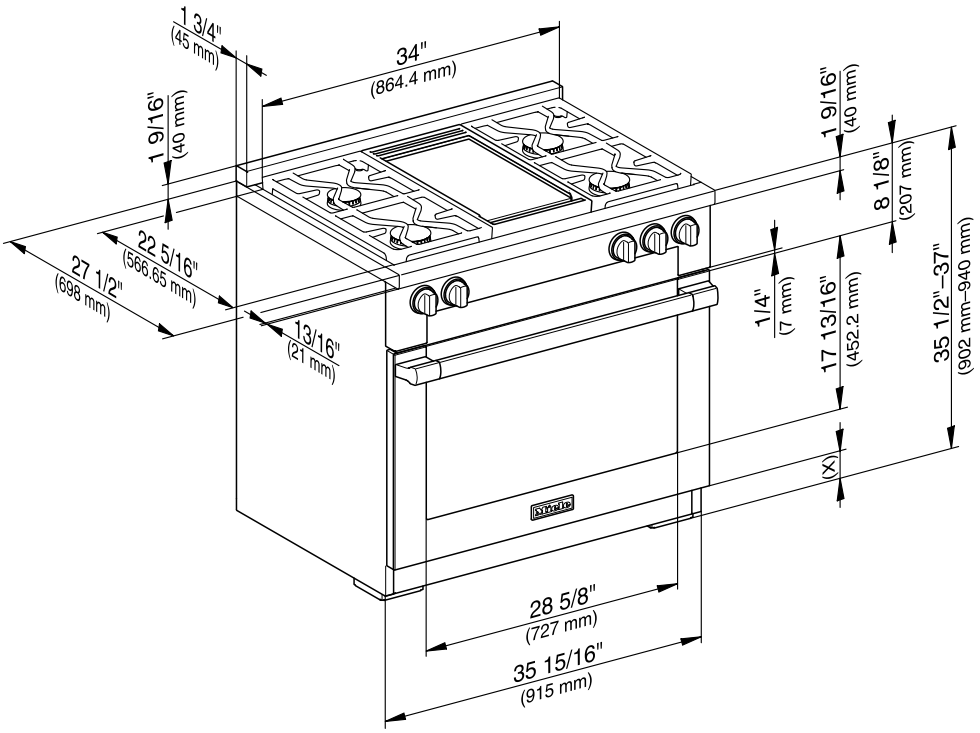

(x) = Depending on the appliance height adjustment: 5" - 6 1/2" (127 mm - 165.1 mm)

Dual Fuel Range dimensions

Rear view of HR 1936

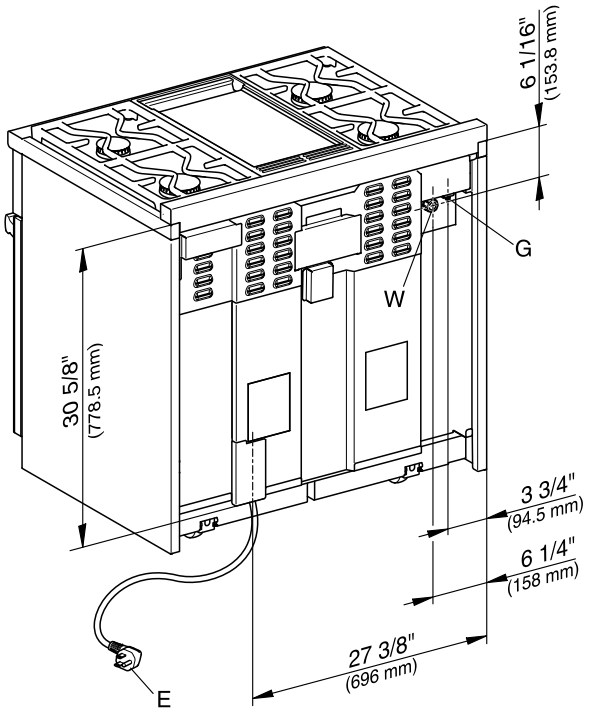

E = Electrical connection

W = Water connection

G = Gas connection

Detailed views of HR 1954

Side view of HR 1954

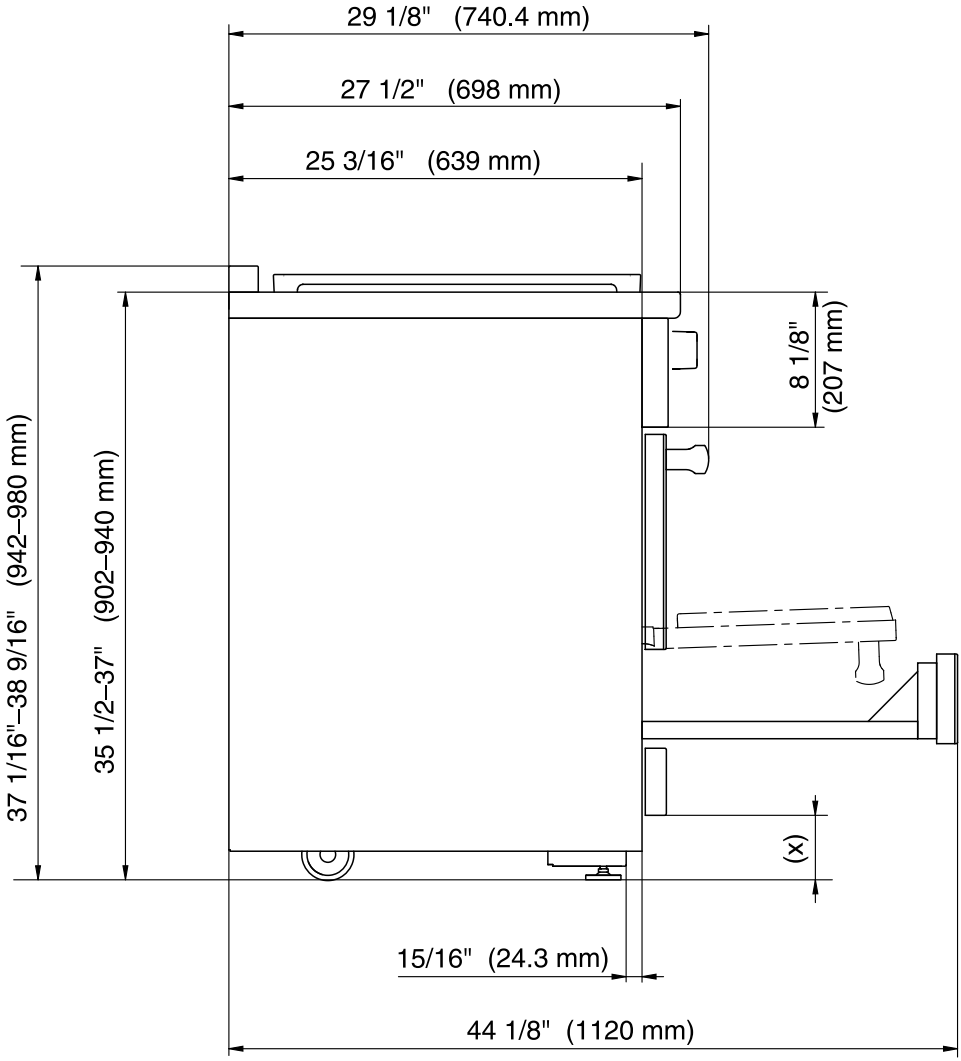

(x) = Depending on the appliance height adjustment: 4" - 5 1/2" (101.6 mm - 139.7 mm)

Dual Fuel Range dimensions

Detailed front side view of HR 1954

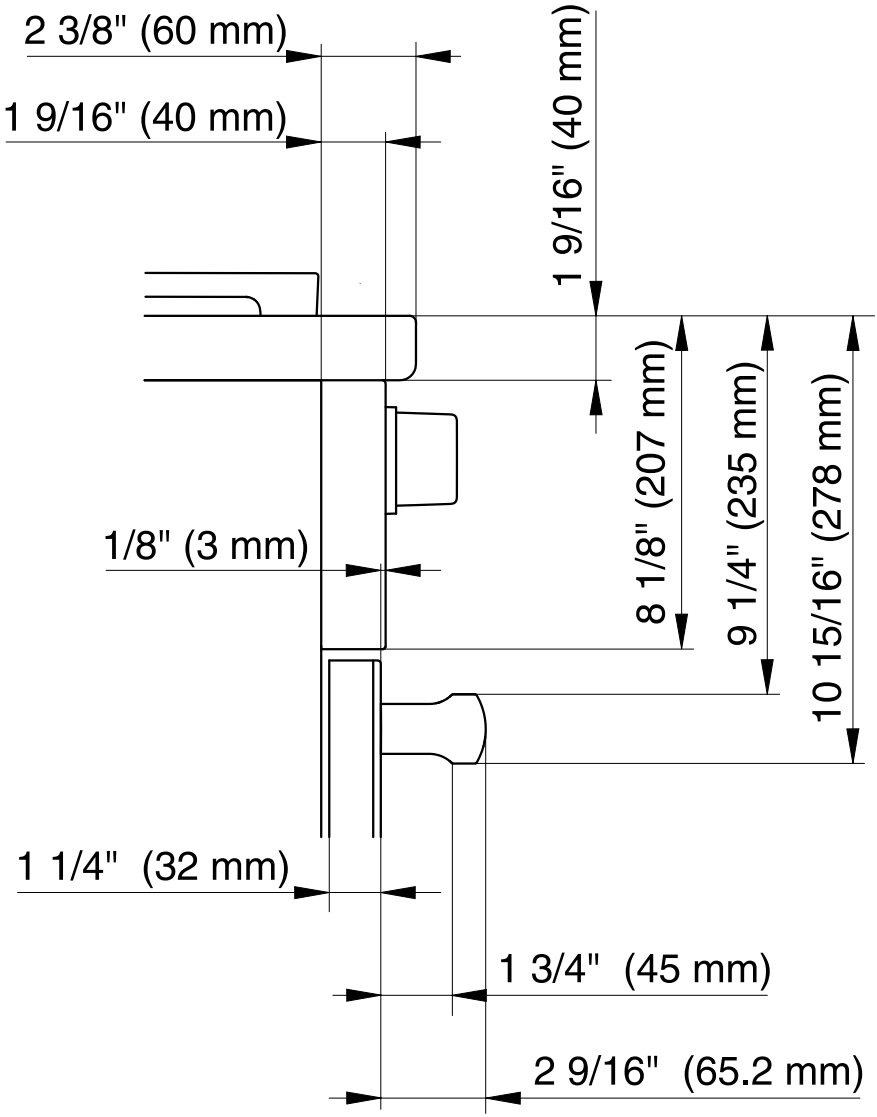

Front side view of HR 1954

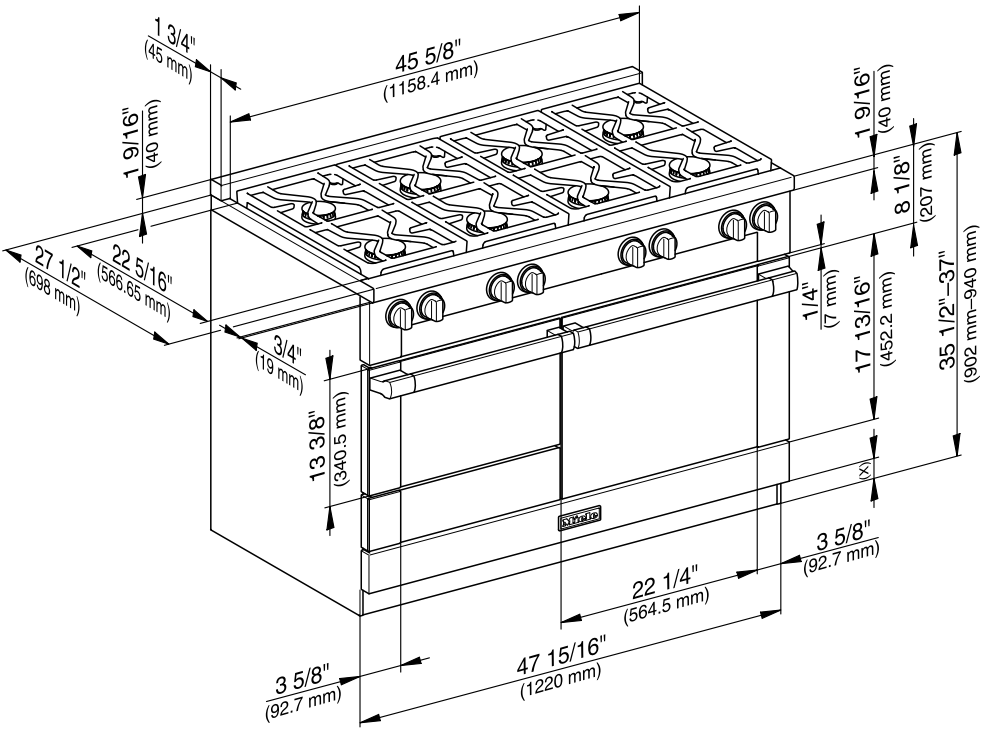

(x) = Depending on the appliance height adjustment: 4" - 5 1/2" (101.6 mm - 139.7 mm)

Dual Fuel Range dimensions

Rear view of HR 1954

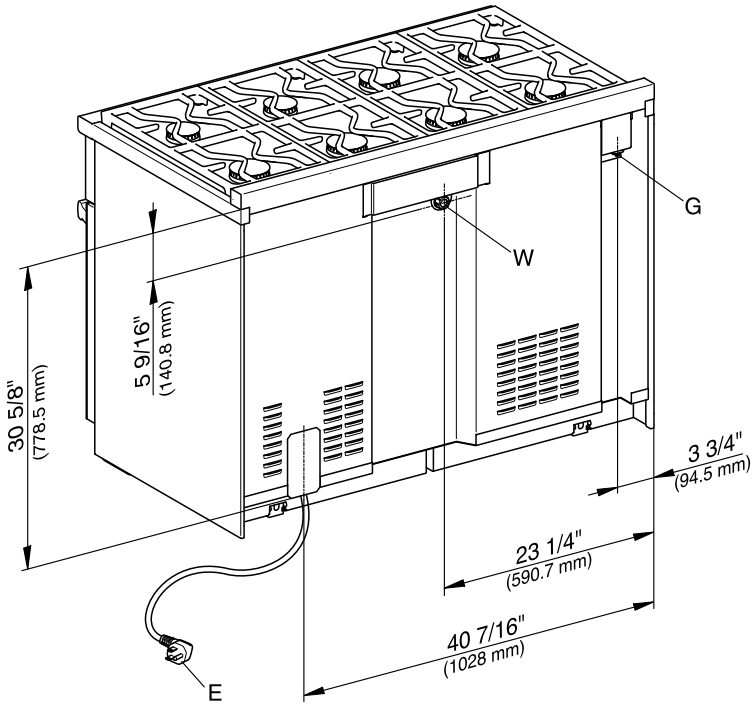

E = Electrical connection

W = Water connection

G = Gas connection

Detailed views of HR 1955

Side view of HR 1955

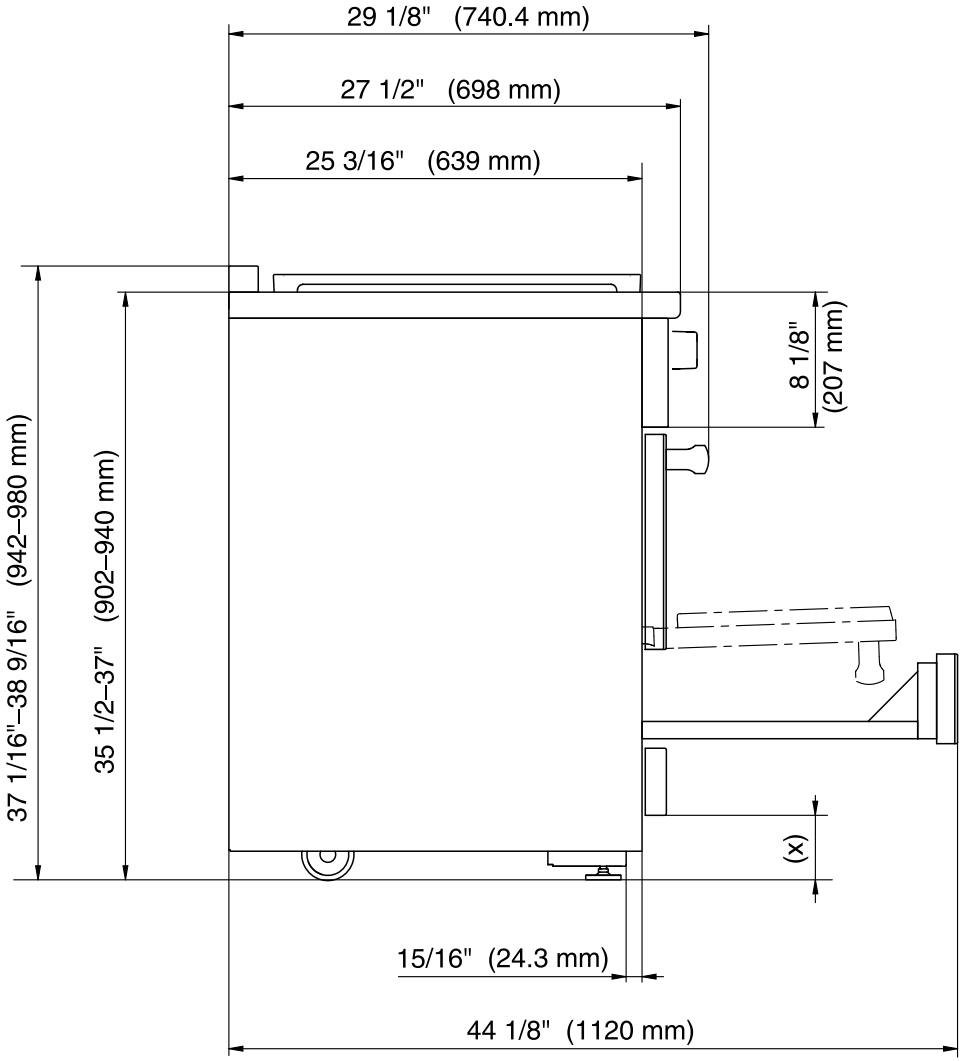

(x) = Depending on the appliance height adjustment: 4" - 5 1/2" (101.6 mm - 139.7 mm)

Dual Fuel Range dimensions

Detailed front side view of HR 1955

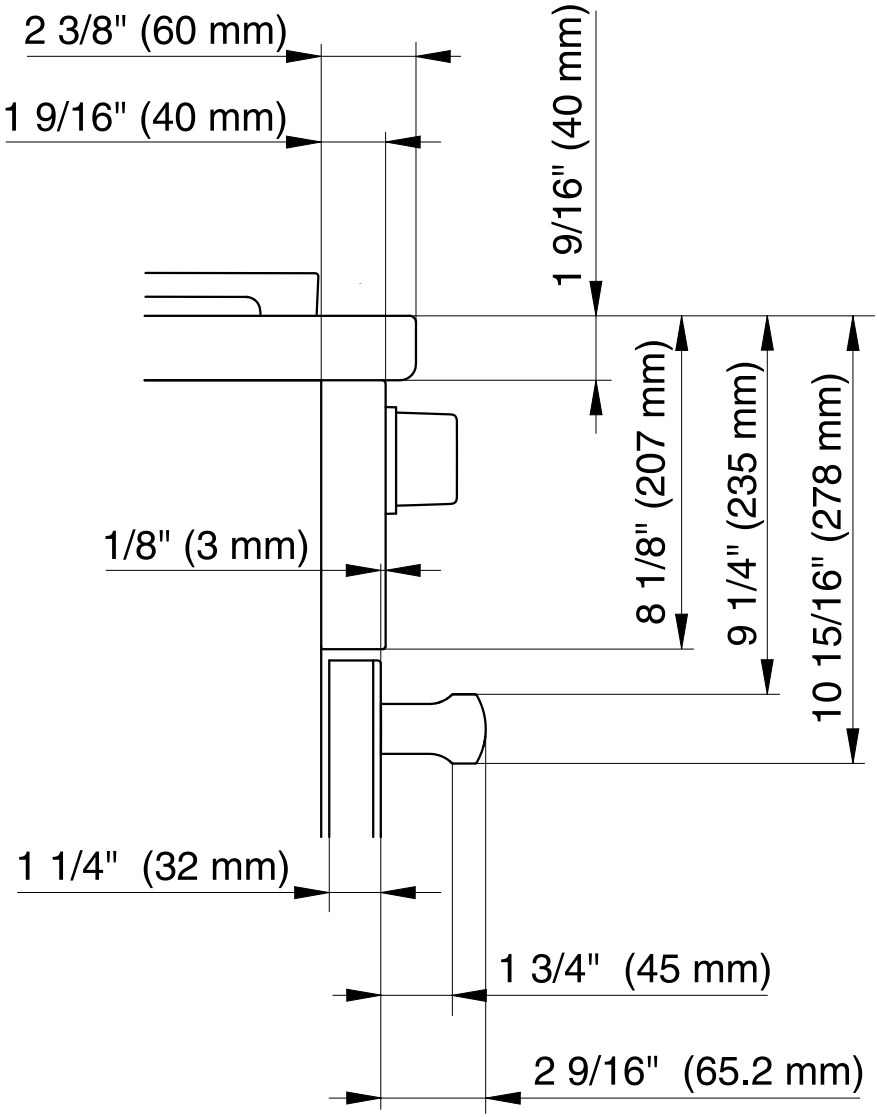

Front side view of HR 1955

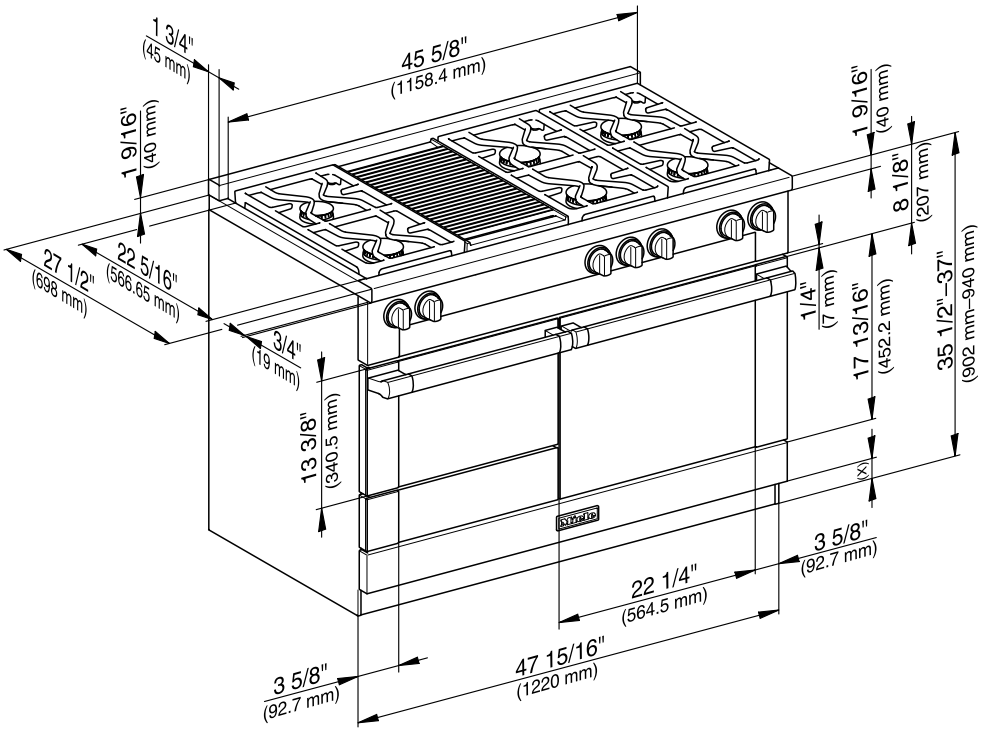

(x) = Depending on the appliance height adjustment: 4" - 5 1/2" (101.6 mm - 139.7 mm)

Dual Fuel Range dimensions

Rear view of HR 1955

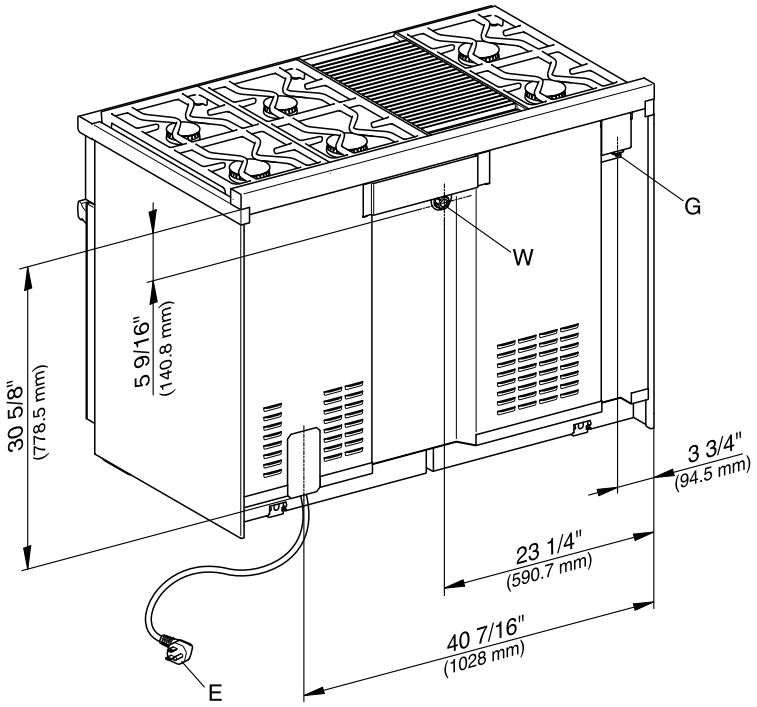

E = Electrical connection

W = Water connection

G = Gas connection

Detailed views of HR 1956

Side view of HR 1956

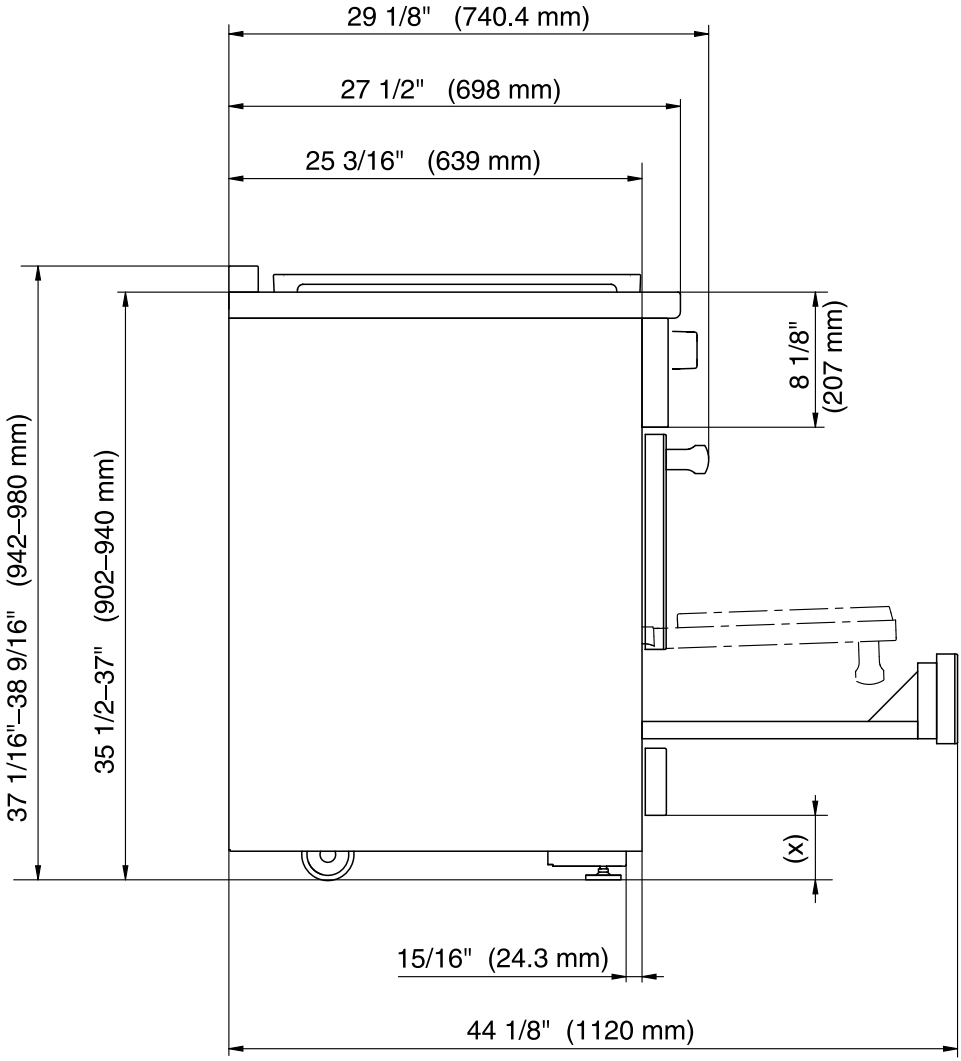

(x) = Depending on the appliance height adjustment: 4" - 5 1/2" (101.6 mm - 139.7 mm)

Dual Fuel Range dimensions

Detailed front side view of HR 1956

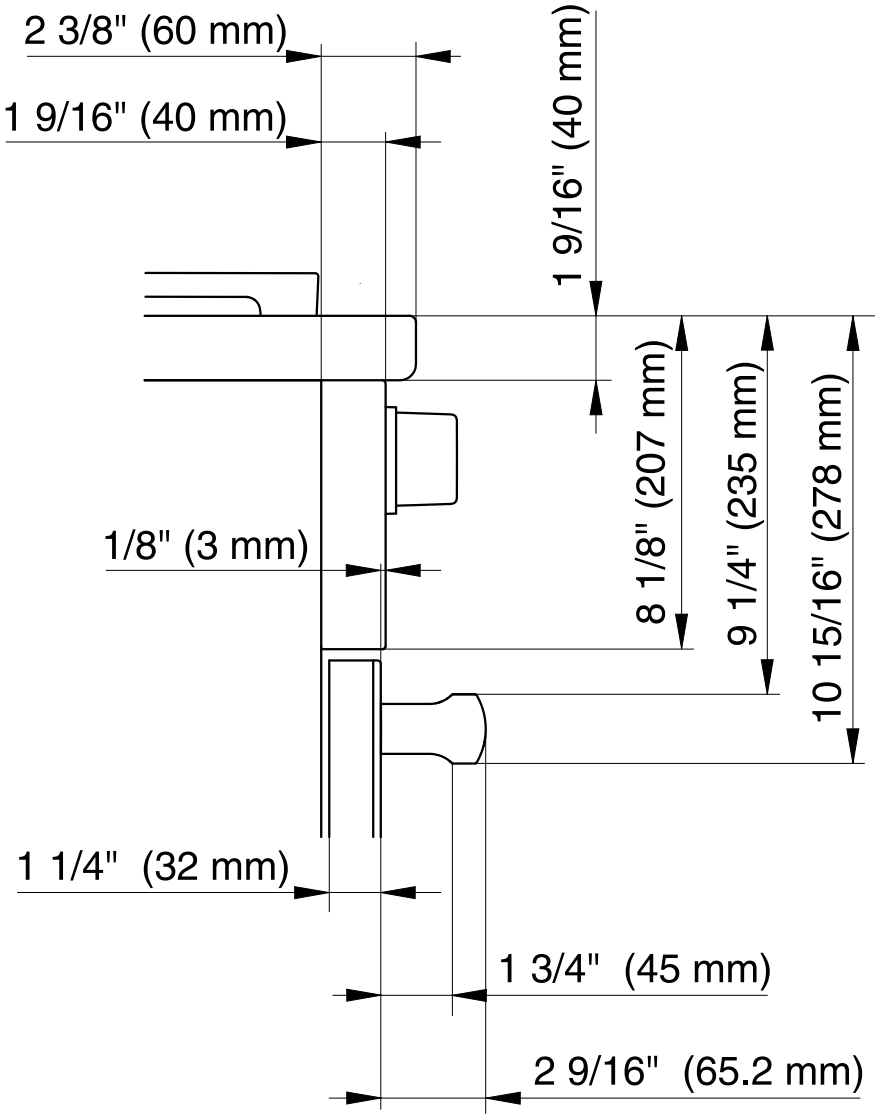

Front side view of HR 1956

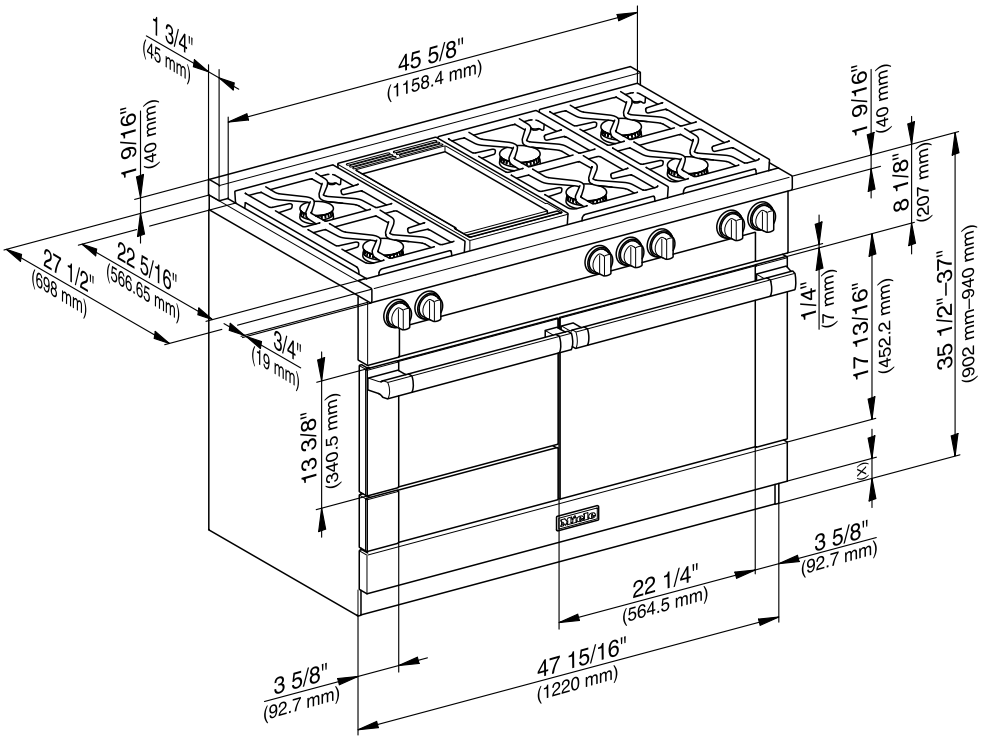

(x) = Depending on the appliance height adjustment: 4" - 5 1/2" (101.6 mm - 139.7 mm)

Dual Fuel Range dimensions

Rear view of HR 1956

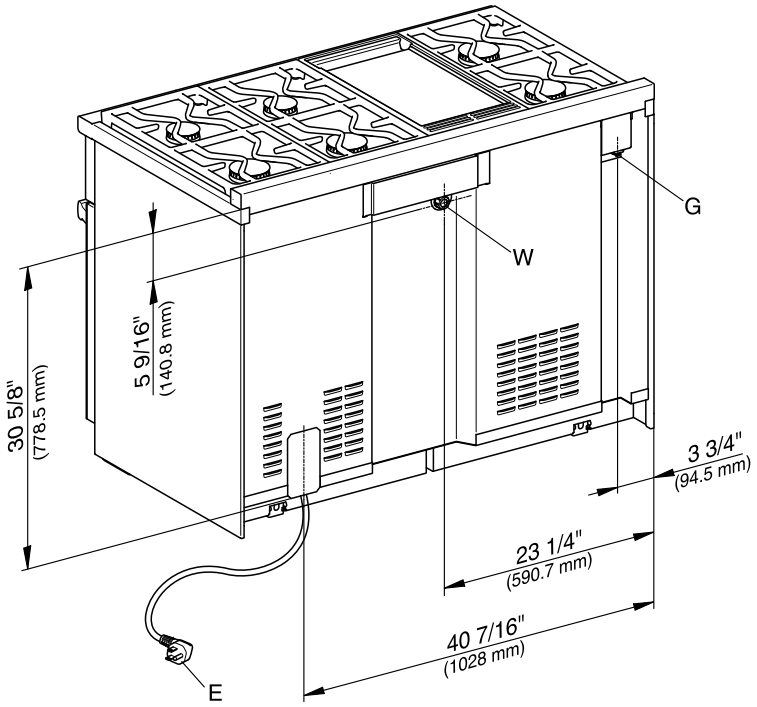

E = Electrical connection

W = Water connection

G = Gas connection

Before installation

⚠ WARNING

Children and adults can tip over the range if has not been secured. This may lead to fatal injuries.

Make sure that the anti-tip device is properly installed and locked into place. It should be screwed to the floor or wall and engage with the center of the bottom of the range.

You must take care to protect the installed flooring when moving the range.

After moving the range, make sure that the anti-tip device locks back into place. It should be screwed to the floor or wall and engage with the center of the bottom of the range.

Do not use the range if the anti-tip device has not been properly installed and engaged.

Due to the size and weight of the appliance, installation should be carried out by two people.

Any opening in the wall behind the appliance and in the floor under the appliance shall be sealed.

We recommend removing the oven door before installing the range (see "Removing the door" in the Operating Instructions) and all accessories from the oven interior. This will make it easier to install the appliance in its designated space.

Once the range has been installed and secured against tipping, you can reattach the oven door (see "Reinstalling the door" in the Operating Instructions).

Do not carry or lift the range by the oven door handle or the control panel!

Anti-tip device

Checking the installation space

Install the anti-tip device on a floor capable of bearing significant weight, such as a concrete floor, concrete wall or timber framing. The surface must be flat and level.

- If the rear of the range has **distance A** to the supporting wall due to unevenness or wall covering (e.g., tile level), you must install the anti-tip device to the supporting floor. Alternatively, you can also install the anti-tip device with an adapter between the supporting wall and the anti-tip device. The adapter must compensate dimension A and be made of suitable material so that a supporting composite arises between the wall and anti-tip device. Use the corresponding screws (length and diameter).

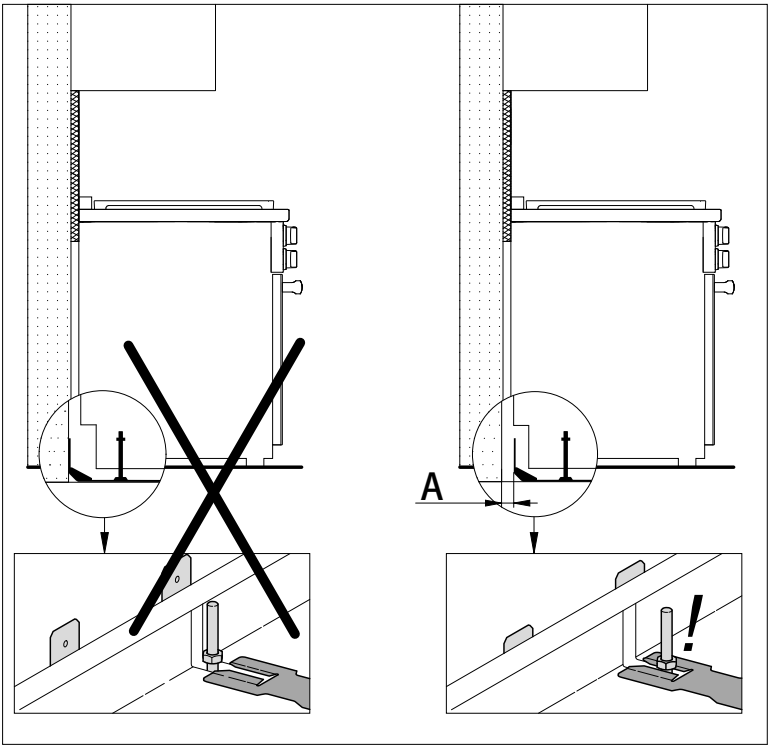

A = Distance between the rear of the range to the supporting wall

- Check the floor surface.
- Check the installation dimensions.

- Check the diagrams for the building's supply lines. Make sure that you do not damage any lines when drilling the holes to attach the anti-tip device.
- Check the position of the electric, gas and water connections (see "Electrical connection," "Gas connection" and "Plumbing"). An overview on the electrical connections for your range can be found in "Notes on installation".

Anti-tip device

Included accessories

– 1 anti-tip device

– 4 screws

– 4 plugs

Installation dimensions of locking bolt

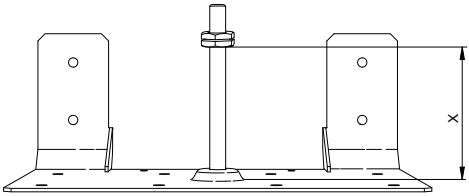

Anti-tip device, front view

Model	Width	X
HR 1421 **HR 1622** **HR 112x** **HR 1724** **HR 192x**	29 15/16" (762 mm)	3 13/16" (97 mm)
HR 113x **HR 193x**	35 15/16" (915 mm)	3 13/16" 97 mm
HR 195x	47 15/16" (1220 mm)	3 1/4" 82 mm

Installing the range with the anti-tip device

⚠ Wear safety shoes and gloves.

The anti-tip device should be installed at the bottom rear of the range at the midpoint of the width.

- Measure the installation space for the range close to floor level.
- Mark the wall at the middle of the space width.
- Position the notch of the anti-tip device on the wall marking.

The anti-tip device must fit tightly on the floor **or** the wall.

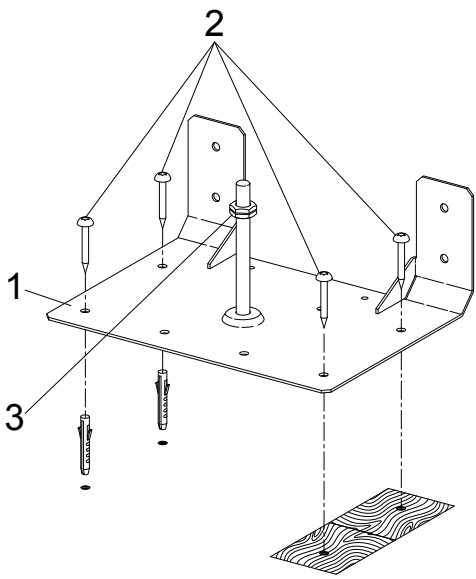

Attaching to the floor

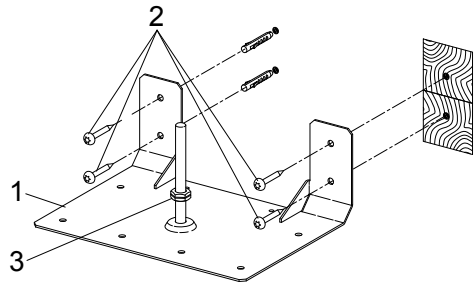

Attaching to the wall

① Anti-tip device

② Screws

③ Locking nut

■ Secure the anti-tip device ① to the floor surface with suitable bearing capacity, either to the floor or wall. using four screws ②.

■ Screw the locking nut ③ to the bolt, see the"Installation dimensions of locking bolt" table.

Anti-tip device

Do not push the range into position before all supply connections have been established.

The toe kick cover is attached to the base of the range by magnets.

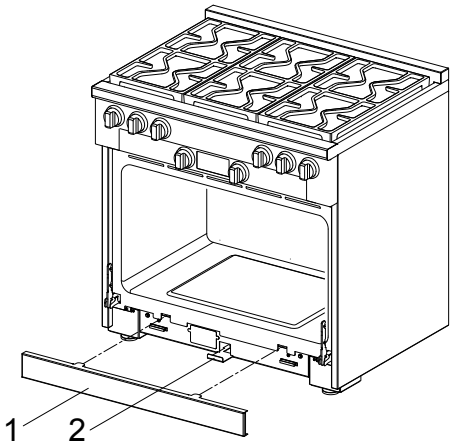

① Toe kick cover

② Locking clamp

- Remove the toe kick cover ① from the appliance.
- Pull out the locking clamp ② .

The locking clamp extends through the toe kick cover of the range housing. Its length is approximately equal to the depth of the range. It can be pulled out and pushed back in again. Its length is approximately equal to the depth of the range.

A slot is located in the non-visible rear section of the locking latch. This slot engages with the bolt of the anti-tip device when you slide the locking latch into the range.

Complete all necessary connections for the range. Read the information in the"Electrical connection","Gas connection" and"Plumbing" sections.

The range can be damaged if it is lifted using the cover, the trim or the door handle.

Open the oven door and hold the appliance by the front of the oven interior.

Lift the range and move it with the help of the rear wheels.

■ Slide the range into position, guiding the middle of the appliance onto the anti-tip device. Slide the appliance all the way back to the wall.

The range can be aligned if necessary. Check it with a spirit level.

– Rear adjustment right ② and left: You will need an open-end wrench (3/8" (10 mm)).
– Front adjustment right ③ and left: You will need an open-end wrench (5/8" (16 mm)) for the locknut and an open-end wrench (1/2" (13 mm)) for the adjustable nut.

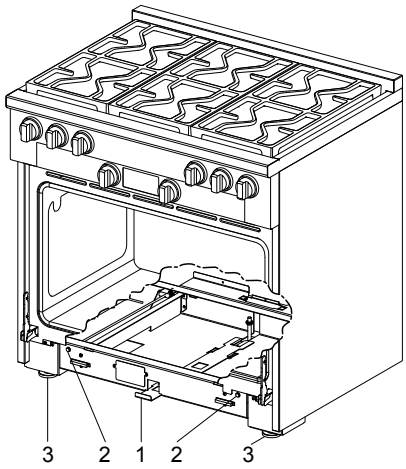

① Locking clamp

② Rear adjustment

③ Front adjustment

■ Align the range.

■ Slide the locking clamp ① firmly back.

Anti-tip device

In the range housing, there is an opening ① for the bolt ② of the anti-tip device. The opening allows the range to be slid onto the anti-tip device and back to the wall.

The locking clamp ③ must noticeably engage with the bolt ② so that anti-tip protection is ensured for the range.

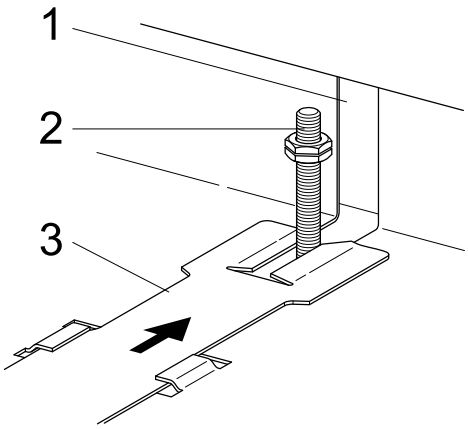

① Opening in the range housing

② Anti-tip device bolt

③ Locking clamp with slot

The toe kick cover can only be attached if the locking clamp ③ has been slid all the way into the appliance.

■ Fit the toe kick cover on the range.

Disconnecting the range from the anti-tip device

⚠ WARNING
Children and adults can tip over the range if has not been secured. This may lead to fatal injuries.

If you need to remove the range from its installation space, e.g. for service, you first need to disconnect the appliance from the anti-tip device.

■ Follow the instructions for installation in reverse order.

⚠ ATTENTION:
During installation, maintenance and repair work, the range must be disconnected from the electrical supply. It is only completely isolated from the electrical supply if the plug fuses have been fully unscrewed (where applicable), the circuit breaker has been tripped or the power cord has been unplugged from the wall outlet.

Installation work and repairs should only be performed by a qualified technician in accordance with all applicable codes and standards. Repairs and service by unqualified persons could be dangerous and the manufacturer will not be held responsible.Installation, repair, and maintenance work should only be performed by a Miele-authorized service technician. Work by unqualified persons can cause considerable danger to users. Miele cannot be held liable for any damage arising as a result of such work.

To avoid damaging the range, make sure that the connection data (voltage and frequency) on the data plate correspond to the building's power supply before connecting the appliance.
When in doubt, consult a qualified electrician.

The internal electrical wiring of the appliance has been performed and tested according to the valid regulations. To guarantee malfunction-free operation, ensure the proper phase assignment of the socket. In case of doubt, ask an electrician.

The plug must be inserted into a suitable outlet that has been installed and grounded in compliance with all applicable local regulations.

WARNING: THIS APPLIANCE MUST BE GROUNDED

Installer: Please pass these instructions on to the customer.

Electrical connection

Electrical connection

Model	Power cord	NEMA	For electrical supply with			
				USA	Canada	
HR 1421	Approx. 5' 11" (1.80 m)	14-50 P plug	120/208 V or 120/240 V	50 A	40 A	60 Hz
HR 1622	Approx. 5' 11" (1.80 m)	14-50 P plug	120/208 V or 120/240 V	50 A	40 A	60 Hz
HR 195x	Approx. 5' 11" (1.80 m)	14-50 P plug	120/208 V or 120/240 V	50 A	40 A	60 Hz
HR 1724 HR 192x HR 193x	Approx. 5' 11" (1.80 m)	14-30 P plug	120/208 V or 120/240 V	30 A	30 A	60 Hz
HR 112x HR 113x	Approx. 5' 11" (1.80 m)	5-15 P plug	120V	15 A	15 A	60 Hz

Data plate

The data plate with the connection information for the range is located in the middle of the base front behind the removable toe kick cover (see "Guide to the range").

SAVE THESE INSTRUCTIONS FOR THE ELECTRICAL INSPECTOR'S USE.

This appliance must be grounded in compliance with all applicable local and national regulations.

Installation, repair and maintenance work should only be performed by a Miele authorized service technician in compliance with local regulations and the ANSI National Electrical Code / NFPA 70 in the United States or the Canadian Electrical Code, Part I in Canada (CSA standard C22.1).

Notes on connecting to the water supply

The appliance must be connected to the water supply by a qualified professional.

Disconnect the appliance from the power supply before connecting it to the water line.

Turn off the water supply before connecting the water lines for the range.

- All devices used for connecting the appliance to the water supply must comply with the current national and local safety regulations in the country in which the range is being installed.
- We do not recommend the use of water produced by Reverse Osmosis filtration systems. Along with the possibility of detrimental health effects, highly purified water can cause the premature corrosion and failure of components in your appliance. Furthermore, many RO systems, especially under counter systems, do not deliver sufficient water pressure to allow the appliance to operate properly. Connection to such a water supply could cause poor performance, premature appliance failure, leaks and/or flooding. Miele will not be responsible for any damages caused by appliances connected to these systems. Only use filtered, softened and demineralized water from the building's plumbing to supply the oven.
- **Connect the range to a cold water supply only.**
- The range may be connected to a water supply without a non-return valve.
- A water shut-off valve must be provided between the stainless steel hose and the household water supply to ensure that the water supply can be cut off if necessary.
- The water shut-off valve must be accessible after installation.
- The water pressure must be between 1 and 10 bar (10^5 and 10^6 Pa or 14.5 and 145 psi). If the pressure is higher than this, install a pressure reducer.
- 30" and 36" range: The provided stainless steel hose has a length of 4' 11" (1.5 m).
  48" Range: The provided stainless steel hose has a length of 9' 10" (3 m).
  Longer intake hoses are available if necessary. Do not shorten the hoses.
- The total hose length must not exceed 24.5 ft. (7.5 m).

Ensure that the shut-off valve is accessible after installation.

Replace the stainless steel hose if it is damaged, using only an original Miele hose to do so (available from Miele). The hose must be suitable for supplying drinking water.

Attach the stainless steel hose to the range.

Make sure that the stainless steel hose is not kinked or damaged. The stainless steel hose must **not** be shortened.

- Remove the cover from the water supply connection at the back of the range.
- Take the **angled** side of the stainless steel hose and check whether a gasket is present. If not, insert one.
- Screw the stainless steel hose coupling nut onto the threaded union.
- Ensure that the hose is correctly seated.

Connecting to the water supply

Danger of electric shock!
Disconnect the range from the electrical supply before connecting it to the water supply.

- Check that the gasket is present. Replace, if not, insert before connecting to the water supply.

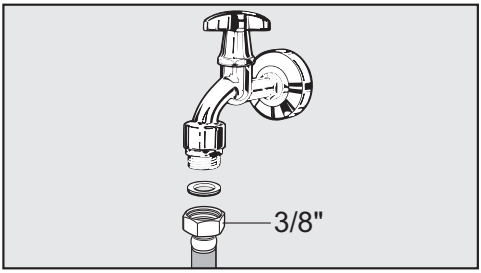

- Connect the stainless steel hose to the water supply.

Old or previously used tubing should never be connected to the range.
Only use the stainless steel hose supplied.

- Ensure that the hose is correctly seated.
- Slowly open the shut-off valve to the water supply and check for leaks.

⚠ Connection to the gas supply may only be performed by a duly authorized technician. This technician is responsible for proper function at the installation site.
In Massachusetts, the gas connection may be performed only by a certified gas installer.

The range must be connected with its own shut-off valve.
The shut-off valve must be accessible and visible, after the opening of a cabinet door, if necessary.

The connection of the range can be for natural gas or propane gas according to the model.
Ask your gas company what kind of gas is used and compare it with the specifications on the data plate.

The range is not connected to an exhaust vent.
During the setup and connection of the range, observe the applicable installation conditions, especially suitable ventilation measures.

The gas connections must be arranged in such a way that they are not heated and damaged by the operation of the range.
In particular, make sure that the gas hose lines and connection fittings on the range do not come into contact with hot exhaust gases.

Flexible connection lines can be damaged by incorrect routing.
Attach flexible connecting lines in such a way so that they do not come into contact with any moving kitchen parts (e.g., a drawer) and are not exposed to mechanical stress.

The range and the shut-off valve must be disconnected from the gas supply during gas pressure tests.
Disconnect the range and the shut-off valve from the gas supply before performing a gas pressure test at a pressure of more than 1/2 psi (3.5 kPA). Close the shut-off valve of the gas supply before performing a gas pressure test at a pressure of less than or equal to 1/2 psi (3.5 kPA).

Incorrectly sealed gas lines can lead to a gas leak and thus to an explosion.
Seal all gas lines with a suitable thread sealant.

Seal tightness tests on the range must be performed according to manufacturer specifications.

The gas connection must be established only Miele-authorized specialists according to the local and following regulations:
National Fuel Gas Code
ANSI Z 21.1 / NFPA No. 54 for the United States or the current Can / CGA B 149.1 and 2 Installation Codes of Gas Appliances for Canada.

Gas connection

The installation must conform with local codes or, in the absence of local codes, with the National Fuel Gas Code, ANSI Z223.1/NFPA 54.

The gas pressure may not undershoot or exceed certain values.

Make sure that the maximum gas pressure upstream of the gas pressure controller does not amount to more than 1/2 psi (3.5 kPA) for natural and propane gas.

Make sure that the minimum gas pressure amounts to a 6" (150 mm) water head in the case of natural gas and a 11" (279,4 mm) water head in the case of propane gas.

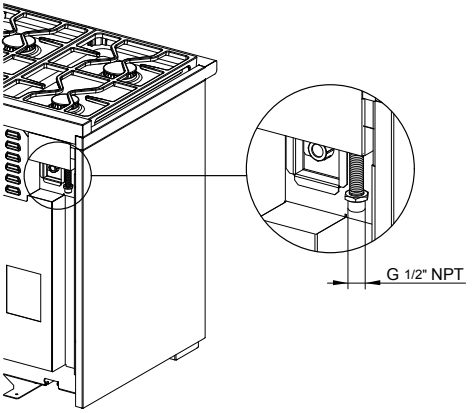

Burner ratings for HR 1124

	Gas type	Btu/hr	kW
		max	max
Simmer burner	Natural gas	12.500	3.70
	Propane gas	12.500	3.70
Power burner	Natural gas	19.500	5.70
	Propane gas	19.500	5.70
Oven top burner	Natural gas	22.000	6.45
	Propane gas	20.150	5.90
Oven bottom burner	Natural gas	23.200	6.79
	Propane gas	23.200	6.79
Total output of Cooktop	Natural gas	71.000	20.80
	Propane gas	71.000	20.80
Maximum total output of Range	Natural gas	94.200	27.59
	Propane gas	94.200	27.59

Burner ratings of Standard Burner Configuration

Burner ratings for HR 1134

	Gas type	Btu/hr	kW
		max	max
Simmer burner	Natural gas	12.500	3.70
	Propane gas	12.500	3.70
Power burner	Natural gas	19.500	5.70
	Propane gas	19.500	5.70
Oven top burner	Natural gas	22.000	6.45
	Propane gas	20.150	5.90
Oven bottom burner	Natural gas	25.500	7.47
	Propane gas	27.000	7.90
Total output of Cooktop	Natural gas	110.000	32.20
	Propane gas	110.000	32.20
Maximum total output of Range	Natural gas	135.500	39.67
	Propane gas	137.000	40.10

Burner ratings for HR 1135

	Gas type	Btu/hr	kW
		max	max
Simmer burner	Natural gas	12.500	3.70
	Propane gas	12.500	3.70
Power burner	Natural gas	19.500	5.70
	Propane gas	19.500	5.70
Grill	Natural gas	19.000	5.50
	Propane gas	15.500	4.50
Oven top burner	Natural gas	22.000	6.45
	Propane gas	20.150	5.90
Oven bottom burner	Natural gas	25.500	7.47
	Propane gas	27.000	7.90
Total output of Cooktop	Natural gas	90.000	26.30
	Propane gas	86.500	25.30
Maximum total output of Range	Natural gas	115.500	33.77
	Propane gas	113.500	33.20

Burner ratings of Standard Burner Configuration

Burner ratings for HR 1136

	Gas type	Btu/hr	kW
		max	max
Simmer burner	Natural gas	12.500	3.70
	Propane gas	12.500	3.70
Power burner	Natural gas	19.500	5.70
	Propane gas	19.500	5.70
Griddle	Natural gas	13.000	3.80
	Propane gas	14.300	4.20
Oven top burner	Natural gas	22.000	6.45
	Propane gas	20.150	5.90
Oven bottom burner	Natural gas	25.500	7.47
	Propane gas	27.000	7.90
Total output of Cooktop	Natural gas	84.000	24.60
	Propane gas	85.300	25.00
Maximum total output of Range	Natural gas	109.500	32.07
	Propane gas	112.300	32.90

Burner ratings for HR 1724

	Gas type	Btu/hr	kW
		max	max
Simmer burner	Natural gas	12.500	3.70
	Propane gas	12.500	3.70
Power burner	Natural gas	19.500	5.70
	Propane gas	19.500	5.70
Total output of Cooktop	Natural gas	71.000	20.80
	Propane gas	71.000	20.80

Burner ratings for HR 1924

	Gas type	Btu/hr	kW
		max	max
Simmer burner	Natural gas	12.500	3.70
	Propane gas	12.500	3.70
Power burner	Natural gas	19.500	5.70
	Propane gas	19.500	5.70
Total output of Cooktop	Natural gas	71.000	20.80
	Propane gas	71.000	20.80

Burner ratings for HR 1934

	Gas type	Btu/hr	kW
		max	max
Simmer burner	Natural gas	12.500	3.70
	Propane gas	12.500	3.70
Power burner	Natural gas	19.500	5.70
	Propane gas	19.500	5.70
Total output of Cooktop	Natural gas	110.000	32.20
	Propane gas	110.000	32.20

Burner ratings of Standard Burner Configuration

Burner ratings for HR 1935

	Gas type	Btu/hr	kW
		max	max
Simmer burner	Natural gas	12.500	3.70
	Propane gas	12.500	3.70
Power burner	Natural gas	19.500	5.70
	Propane gas	19.500	5.70
Grill	Natural gas	19.000	5.50
	Propane gas	15.500	4.50
Total output of Cooktop	Natural gas	90.000	26.30
	Propane gas	86.500	25.30

Burner ratings for HR 1936

	Gas type	Btu/hr	kW
		max	max
Simmer burner	Natural gas	12.500	3.70
	Propane gas	12.500	3.70
Power burner	Natural gas	19.500	5.70
	Propane gas	19.500	5.70
Griddle	Natural gas	13.000	3.80
	Propane gas	14.300	4.20
Total output of Cooktop	Natural gas	84.000	24.60
	Propane gas	85.300	25.00

Burner ratings for HR 1954

	Gas type	Btu/hr	kW
		max	max
Simmer burner	Natural gas	12.500	3.70
	Propane gas	12.500	3.70
Power burner	Natural gas	19.500	5.70
	Propane gas	19.500	5.70
Total output of Cooktop	Natural gas	142.000	41.60
	Propane gas	142.000	41.60

Burner ratings for HR 1955

	Gas type	Btu/hr	kW
		max	max
Simmer burner	Natural gas	12.500	3.70
	Propane gas	12.500	3.70
Power burner	Natural gas	19.500	5.70
	Propane gas	19.500	5.70
Grill	Natural gas	19.000	5.50
	Propane gas	15.500	4.50
Total output of Cooktop	Natural gas	122.000	35.70
	Propane gas	118.500	34.70

Burner ratings of Standard Burner Configuration

Burner ratings for HR 1956

	Gas type	Btu/hr	kW
		max	max
Simmer burner	Natural gas	12.500	3.70
	Propane gas	12.500	3.70
Power burner	Natural gas	19.500	5.70
	Propane gas	19.500	5.70
Griddle	Natural gas	13.000	3.80
	Propane gas	14.300	4.20
Total output of Cooktop	Natural gas	116.000	34.00
	Propane gas	117.300	34.40

Burner ratings of M Pro Power (Zero Gap)

When the BTU-reducing kit (Zero Gap) is used, the burner ratings of the burners change as follows:

	Gas type	BTU/hr	kW
		max	max
Simmer burner	Natural gas	10.000	2.93
	Propane gas	10.000	2.93
Power burner	Natural gas	14.700	4.31
	Propane gas	14.700	4.31
Grill	Natural gas	19.000	5.50
	Propane gas	15.500	4.50
Griddle	Natural gas	13.000	3.80
	Propane gas	14.300	4.20

Burner ratings of M Pro (Décor Hood)

When the BTU-reducing kit (Décor Hood) is used, the burner ratings of the burners change as follows:

	Gas type	BTU/hr	kW
		max	max
Simmer burner	Natural gas	10.000	2.93
	Propane gas	10.000	2.93
Power burner	Natural gas	12.200	3.58
	Propane gas	12.200	3.58
Grill	Natural gas	19.000	5.50
	Propane gas	15.500	4.50
Griddle	Natural gas	13.000	3.80
	Propane gas	14.300	4.20

Possible combinations - Range with BTU Reducing jet kit

If a BTU reducing jet kit is necessary an authorized installer is required to adapt the product in accordance with local codes and standards. The nozzles are a standard accessory and are changed during installation.

Natural gas

BTU Reducing jet kit	HR 113x HR 193x	HR 195x NG
36" NG Zero Gap	**Yes**	–
36" NG Decor	**Yes**	–
48" NG Zero Gap	–	**Yes**

Propane gas

BTU Reducing jet kit	HR 113x LP HR 193x LP	HR 195x LP
36" LP Zero Gap	**Yes**	–
36" LP Decor	**Yes**	–
48" LP Zero Gap	–	**Yes**

Disposal of the packing material

The cardboard box and packing materials protect the appliance during shipping. They have been designed to be biodegradable and recyclable.

Ensure that any plastic wrappings, bags, etc. are disposed of safely and kept out of the reach of children. Danger of suffocation!

Disposal of your old appliance

Electrical and electronic appliances contain valuable materials. They also contain certain substances, compounds and components which were essential for the proper functioning and safe use of the equipment. Handling these materials improperly by disposing of them in your household waste can be harmful to your health and the environment. Therefore, please do not dispose of your old appliance with regular household waste and follow local regulations on proper disposal.

Consult with local authorities, dealers or Miele in order to dispose of and recycle electrical and electronic appliances. Miele assumes no responsibility for deleting any personal data left on the appliance being disposed. Please ensure that your old appliance is kept away from children until removal. Observe safety requirements for appliances that may tip over or pose an entrapment hazard.

Please have the model and serial number of your appliance available when contacting Customer Service.

U.S.A.

Miele, Inc.

National Headquarters
9 Independence Way
Princeton, NJ 08540
Phone: 800-843-7231
Fax: 609-419-4298
www.mieleusa.com

Customer Service & Support
Phone: 888-99-MIELE(64353)
Fax: 888-586-8056
service@mieleusa.com

International Headquarters
Miele & Cie. KG
Carl-Miele-Straße 29
33332 Gütersloh
Germany

Canada

Importer
Miele Limited

Headquarters and Miele Centre
161 Four Valley Drive
Vaughan, ON L4K 4V8
www.miele.ca

Customer Care Centre
Phone: 800-565-6435
905-532-2272
customercare@miele.ca

Miele

All Electric: HR1421; HR1622; All Gas: HR1124; HR1134; HR1135; HR1136; Dual Fuel: HR1724; HR1924; HR1934; HR1935; HR1936; HR1954; HR1955; HR1956

en-US, CA

M.-Nr. 10 876 460 / 03