HW 8000

Fully Integrated Wine Cabinet

LIEBHERR

Quality, Design and Innovation

Fully Integrated Wine Cabinet

24"

The fully integrated **HW 8000** multi-temperature wine cabinet is sure to compliment any kitchen, bar, or living room design. The temperature in each of the two sophisticated temperature zones can be set between 41° F and 68°F, ensuring optimal storage conditions for suitable for storing reds, whites, and champagnes. The HW 8000 provides storage flexibility for up to 80 Bordeaux bottles thanks to its beech wood shelving and ten storage areas at varying heights, ideal for grouping different bottles types and sizes. A flexible clip-on labelling system ensures a clear overview of your wine collection. Alternatively, you can display your wines on the high-quality presentation shelf.

The **HW 8000** can be fully integrated to match your unique designs for cabinetry heights at 76” 80" or 84" and can be paired with the LIEBHERR HRB1120 (all refrigerator) and HF861 freezer for maximum refrigeration & wine storage. A stainless steel panel accessory kit is available for the HRB1120 refrigerator, HF861 freezer and HW800 wine at a height of 76” only (see the installation guide at: home.liebherr.com for more detailed instructions).

The **HW 8000**’s activated charcoal filter provides superb air quality by removing contaminating substances from the cabinet air. The insulated glass door with UV protection and LED lighting, alongside the activated charcoal filter, protect your finest wines from busy kitchen influences such as light and damaging odors.

Fully Integrated Wine Cabinet	HW 8000 Vinidor
Energy consumption (kWh/y)	253
Estimated Yearly Energy Cost in US $*	–
Sound rating dB(A)**	36
Total capacity cu.ft. (l)	9.0 (254)
Max. No. of Bordeaux bottles (0.75 l)	80
Number of shelves	10
Shelves on telescopic rails	8
Shelf material	Beech wood shelves
Presentation shelf	1
Electronic control	LCD temp. display for both wine zones, touch electronic
Temperature range °F (°C)	+41°F to +68°F (+5°C to +20°C)
Temperature zones	2
Interior light	LED lighting permanently on, dimmable
Door alarm	acoustic
Safety thermostat	yes
Activated Charcoal filter	yes
Door type	panel ready or stainless steel panel as accessory
SoftSystem	yes
Door hinges	right, reversible
Product dimensions (H/W/D) in. (cm)	69 11/16" / 21 15/16" / 21 13/16" (177/55.7/55.3)
Cut out dimensions (H/W/D) in. (cm) ***	70 1/8" / 22 1/16" / 21 11/16" (178/56/55)
Net weight lbs. (kg)	200.6 (91.0)
Voltage V/Hz	115/60

LED | Wine | Soft System | Telescopic Rails | ADA Compliant

* Estimated energy cost will depend on utility rates and use. Estimated energy cost based on a national average electricity cost of 12 cents per KWh.
** Noise output – according to EN 60704-3.
*** Cut out height does not include toe kick.

German Engineering: Our superior products offer premium quality, cutting edge design, and innovative features that best fit your lifestyle. The use of high quality materials, perfectly detailed finishes, and elite cooling components are combined with the latest production processes, resulting in an outstanding cooling product.

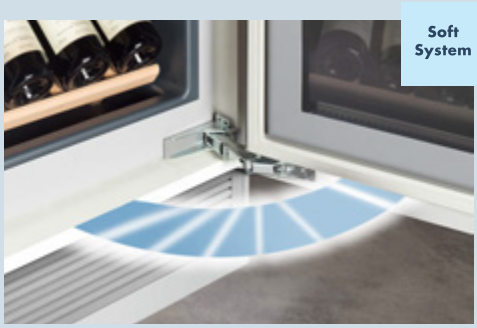

SoftSystem: Liebherr's SoftSystem technology gently cushions the automatic door closing, preventing vibrations which can affect the quality of your finest wines.

Touch Control: The electronic touch system allows temperatures to be set to the exact desired degree, from 41°F to 68°F. Temperatures are clearly displayed on the LCD display for accurate readings of your desired settings.

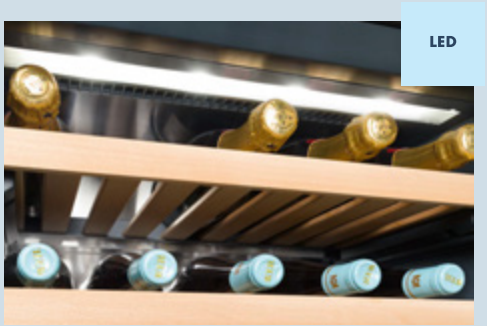

LED Ceiling Light: The energy efficient LED ceiling light not only emits virtually no heat for the optimal storage of wines, but is dimmable for a pleasant ambient light within the cabinet, as well as a cool glow for the room.

Beech Wood Shelving: Liebherr wine cabinets are fitted with beech wood shelving, mounted on telescopic rails for easy and gentle access to wines. The handmade, untreated wood pullout shelves can hold a variety of bottle types.

Presentation Shelf: Show off your finest wines with Liebherr's presentation shelf, displaying your wines at a 45°, visible through the appliance door.

Activated Charcoal Filter: Optimum air quality is guaranteed in Liebherr wine cabinets thanks to the easy-to-replace FreshAir activated charcoal filter, which purifies incoming air, while filtering out damaging odors.

UV Protection: In order to minimize the exposure of light which can damage the maturity of a wine, Liebherr wine cabinets are fitted with special UV-resistant insulated glass, simultaneously protecting and presenting your finest wines.

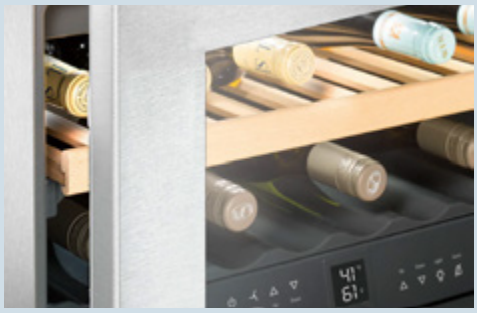

Alarm: Liebherr wine cabinets are equipped with a trustworthy alarm system which alerts the owner if the door has been left open, or if there are temperature changes.

Product Dimensions

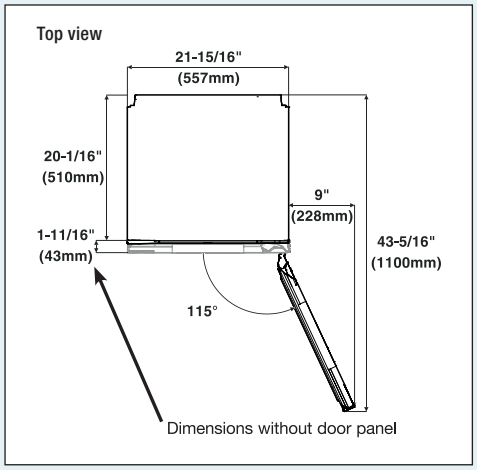

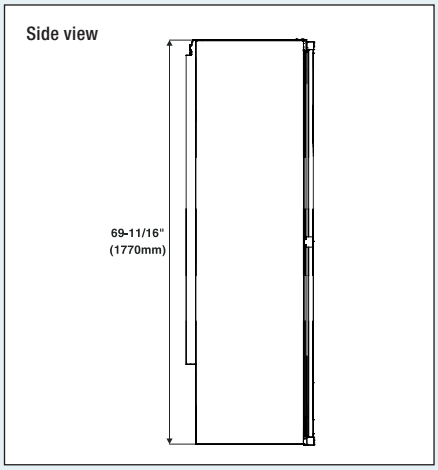

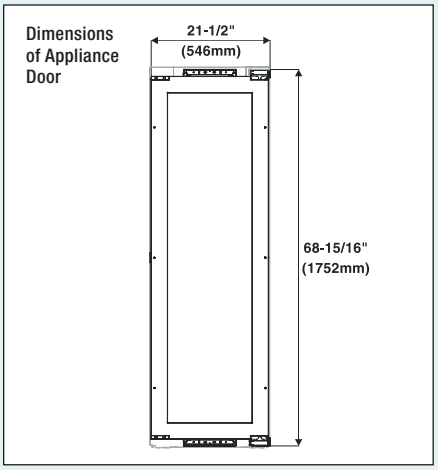

Cabinet Dimensions

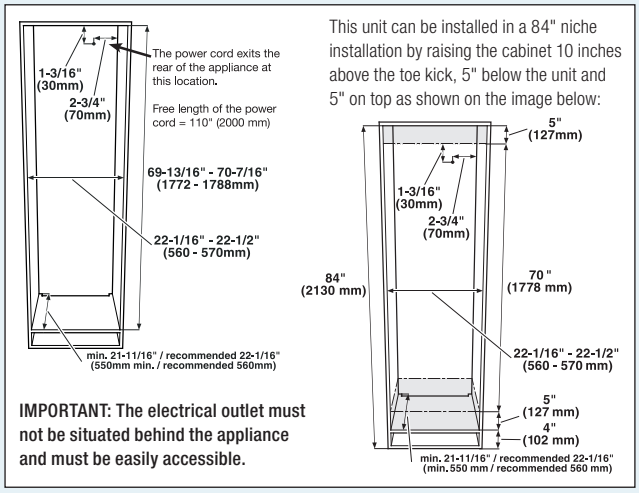

IMPORTANT: The electrical outlet must not be situated behind the appliance and must be easily accessible.

Custom Panel Dimensions

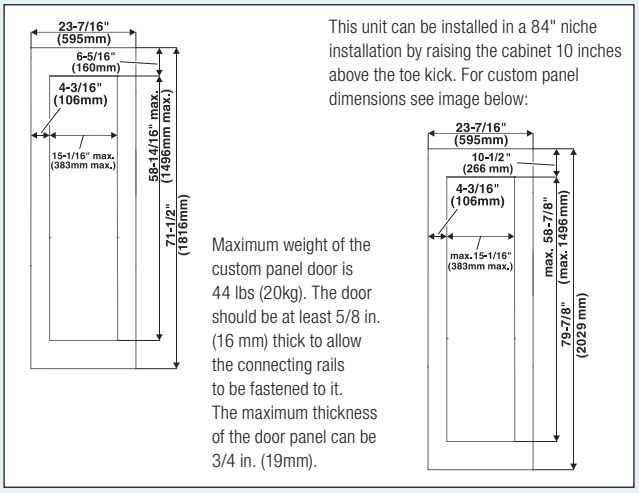

Maximum weight of the custom panel door is 44 lbs (20kg). The door should be at least 5/8 in. (16 mm) thick to allow the connecting rails to be fastened to it. The maximum thickness of the door panel can be 3/4 in. (19mm).

Ventilation Requirements

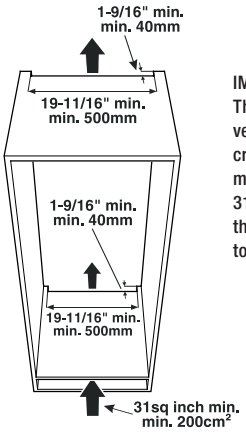

IMPORTANT: The clear ventilation cross section must be at least 31 sq inches from the lower to the top opening.

① Directly above the appliance
② Above the top unit
③ From the front of the top unit with decor grill

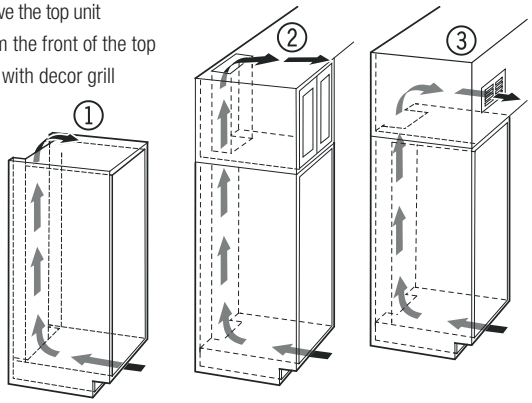

IMPORTANT
When using decor grills, the sum of the individual openings must total a minimum of 31 square inches.
A cut-out section of 31 square inches (200 cm²) for installing the ventilation grill is thus not sufficient.

Subject to modification. For up-to-date information, visit home.liebherr.com.